SPACE SHUTTLE

INSTRUCTION MANUAL

including procedures for...

- operation
- bookkeeping
- adjustment
- diagnostics

Williams®

PLAYFIELD PARTS

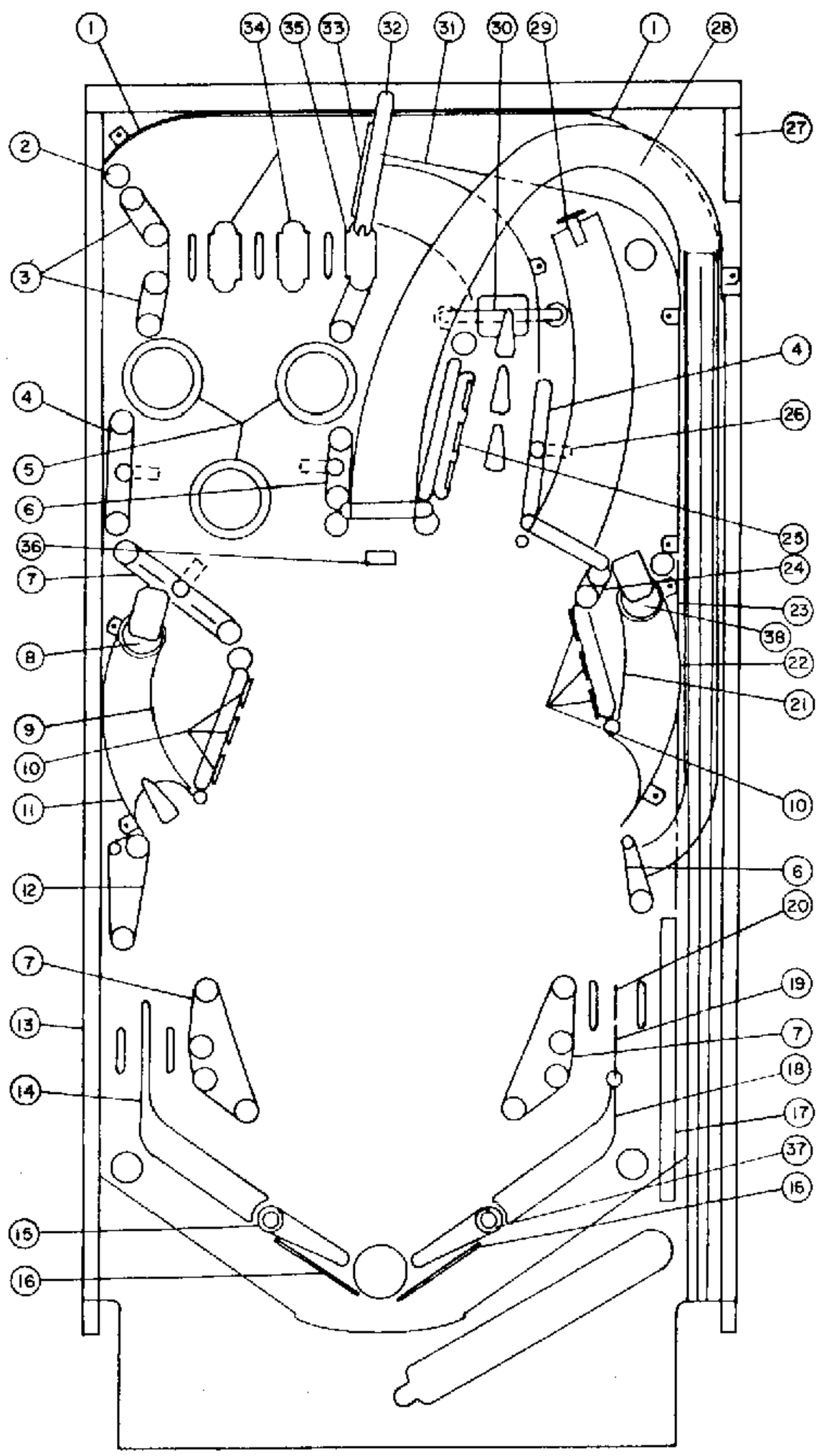

PART NO.	FUNCTION	ASSEMBLY NO.
1.	Ball Guide	D-10562
2.	Bumper Post	A-8701
3.	1" Rubber Ring	23-6302
4.	1-1/2" Rubber Ring	23-6304
5.	Jet Bumper	B-9414
6.	1-1/4" Rubber Ring	23-6303
7.	2-3/8" Rubber Ring	23-6306
8.	Ball Eject - L	B-9361-L
9.	Wire Ball Guide	12-6647
10.	Stand-up Target	A-9618
11.	Ball Guide	B-10559
12.	2" Rubber Ring	23-6305
13.	Wood Rail 37-7/8"	11-790-A
14.	Flpr. Ball Guide	B-10569
15.	Flpr. Assy.	C-9953-L
16.	Anti-Rebound	12-6468
17.	Wood Rail 8-3/4"	11-790-D
18.	Flpr. Ret. Frme	A-8108-R
19.	Gate	A-10607
20.	Wire Ball Guide	12-6466-4
21.	Wire Ball Guide	12-6469-17
22.	Ball Guide	B-10560
23.	Wire Ball Guide	12-6466-8
24.	3/4" Rubber Ring	23-6301
25.	3-Bank Drop Target	D-9355
26.	Stand-up Sub-Assy.	A-4834-J-1
27.	Wood Rail 3"	11-790-B
28.	Ramp Assy.	D-10654
29.	Stationary Tgt.	A-10618
30.	Spin Target	B-9655-535
31.	Ball Guide	C-10561
32.	Ball Gate Brkt.	01-8043
33.	Ball Gate Wire	12-6648
34.	Light Hood	03-7034-9
35.	Light Hood	03-7037-9
36.	1-Bank Drop Target	D-9612
37.	Flpr. Assy.	C-9952-R
38.	Ball Eject	B-9361-R

PLUGS & JACKS

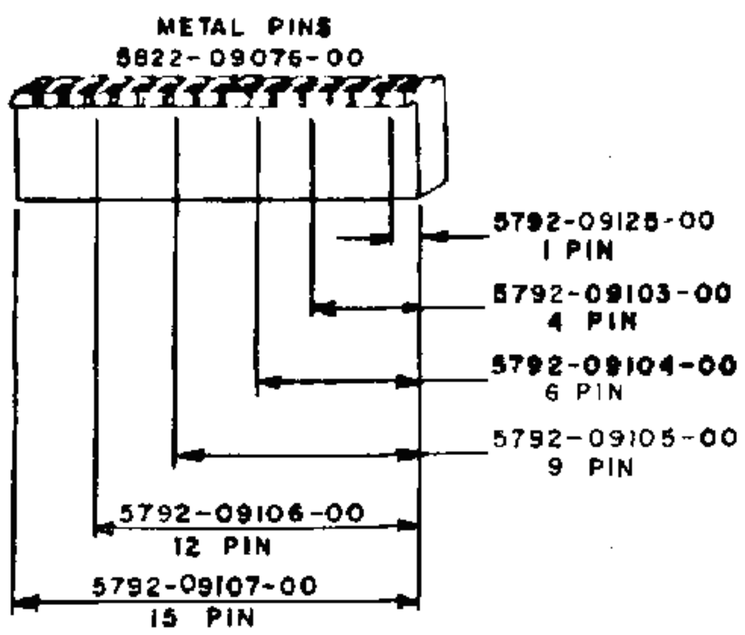
METAL PINS
5822-09076-00
5792-09125-00
1 PIN
5792-09103-00
4 PIN
5792-09104-00
6 PIN
5792-09105-00
9 PIN
5792-09106-00
12 PIN
5792-09107-00
15 PIN

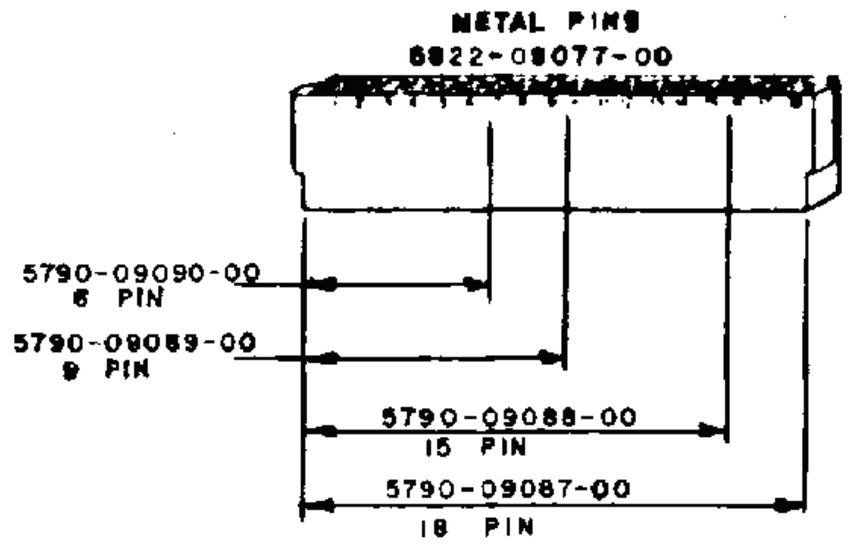
METAL PINS
5822-09077-00
5790-09090-00
6 PIN
5790-09089-00
9 PIN
5790-09088-00
15 PIN
5790-09087-00
18 PIN

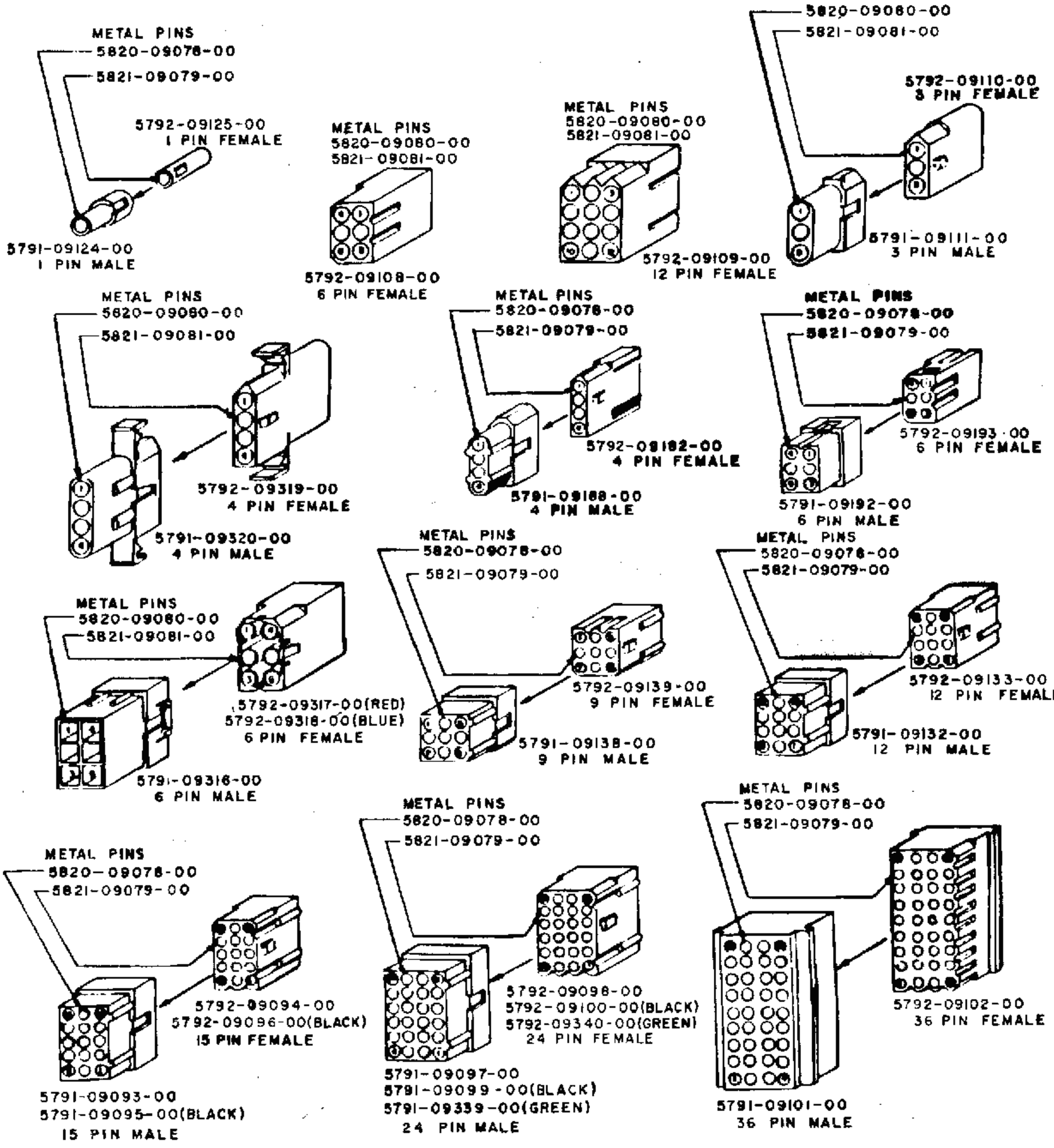
METAL PINS
5820-09078-00
5821-09079-00
5792-09125-00
1 PIN FEMALE
5791-09124-00
1 PIN MALE
METAL PINS
5820-09080-00
5821-09081-00
5792-09108-00
6 PIN FEMALE
METAL PINS
5820-09080-00
5821-09081-00
5792-09109-00
12 PIN FEMALE
METAL PINS
5820-09080-00
5821-09081-00
5792-09110-00
3 PIN FEMALE
5791-09111-00
3 PIN MALE
METAL PINS
5820-09080-00
5821-09081-00
5792-09319-00
4 PIN FEMALE
5791-09320-00
4 PIN MALE
METAL PINS
5820-09078-00
5821-09079-00
5792-09182-00
4 PIN FEMALE
5791-09188-00
4 PIN MALE
METAL PINS
5820-09078-00
5821-09079-00
5792-09193-00
6 PIN FEMALE
5791-09192-00
6 PIN MALE
METAL PINS
5820-09080-00
5821-09081-00
5792-09317-00(RED)
5792-09318-00(BLUE)
6 PIN FEMALE
5791-09316-00
6 PIN MALE
METAL PINS
5820-09078-00
5821-09079-00
5792-09139-00
9 PIN FEMALE
5791-09138-00
9 PIN MALE
METAL PINS
5820-09078-00
5821-09079-00
5792-09133-00
12 PIN FEMALE
5791-09132-00
12 PIN MALE
METAL PINS
5820-09078-00
5821-09079-00
5792-09094-00
5792-09096-00(BLACK)
15 PIN FEMALE
5791-09093-00
5791-09095-00(BLACK)
15 PIN MALE
METAL PINS
5820-09078-00
5821-09079-00
5792-09098-00
5792-09100-00(BLACK)
5792-09340-00(GREEN)
24 PIN FEMALE
5791-09097-00
5791-09099-00(BLACK)
5791-09339-00(GREEN)
24 PIN MALE
METAL PINS
5820-09078-00
5821-09079-00
5792-09102-00
36 PIN FEMALE
5791-09101-00
36 PIN MALE

ROM Summary

IC	DESCRIPTION	TYPE	NUMBER	BOARD	PART NO.
Game-ROM 1	16Kx8 ROM	27128	U20	CPU	A-5343-10767
Sound ROM	16Kx8 ROM	27128	U49	CPU	A-5343-10768
Speech ROM	4Kx8 ROM	2532	U4	Speech	A-5343-10785
Speech ROM	4Kx8 ROM	2532	U5	Speech	A-5343-10786
Speech ROM	4Kx8 ROM	2532	U6	Speech	A-5343-10787

NOTICE

TO ORDER REPLACEMENT ROMS from your authorized ***WILLIAMS*** distributor, specify (1) part number (if available), (2) ROM-label color, (3) REV level (number) on the label, and (4) which game the ROM is used in.

Connector Code

***WILLIAMS* USES A SPECIAL TECHNIQUE** to name plugs and jacks. Each connector receives a number, a letter and a number. A hyphen separates the plug or jack-designation from the pin number.

For example 1J1-3 refers to a connector at board 1, specifies the jack (male or board) side of the connector, identifies the connector as number three on the board, and stipulates pin number three.

- ☐ 1J1 is board 1, jack 1 (a CPU-Board jack).
- ☐ 3P6 is board 3, plug 6 (a Power-Supply plug).
- ☐ J-designations refer to the male part of a connector.
- ☐ P-designations refer to the female part of a connector.
- ☐ The prefix numbers for System-9 games are as listed below.

1-CPU Board
2-(not assigned)
3-Power-Supply Board
4-Master-Display Board
5-Slave-Display Board
6-Backbox
7-Cabinet
8-Playfield
9-Insert Board
10-(not assigned)
11-(not assigned)
12-Speech Board
13-(not assigned)
14-(not assigned)
15-Flipper Power-Supply

System-9 Control Locations

THE ON-OFF SWITCH is on the bottom of the cabinet near the right-front leg as you face the game.

THE VOLUME CONTROL is accessible through the coin door on the left cabinet-wall.

DIAGNOSTIC SWITCHES. ADVANCE, AUTO-UP/MANUAL-DOWN, and HIGH-SCORE RESET switches are located on the back of the coin door. Refer to **Game-Adjustment Procedure** and **Diagnostic Procedures** for operation.

THE MEMORY-PROTECT SWITCH must be open to clear bookkeeping totals and to make game adjustments. This switch is on the inside of the coin-door frame. It automatically opens when the coin door opens.

THE CPU DIAGNOSTIC-SWITCH operates the Memory-Chip Test explained in **Diagnostic Procedures.** This switch is on one edge of the CPU Board near a microprocessor (large socketed) chip.

THE SOUND DIAGNOSTIC-SWITCH is on the CPU Board near the batteries. This switch is used to initiate the Sound Section Test. Refer to **Diagnostic Procedures.**

Replacing System-9 Circuitboards

CPU BOARD. Your level-9, D-10535 CPU Board must be equipped with the ROMs specified in the **ROM Summary.** Only jumpers W1, W3 through W7, W9, W12, W14 and W15 should be connected. Substitute W2 for W1 when a 6802 microprocessor is used instead of a 6808 microprocessor.

DISPLAY BOARDS. Use the C-8363 board and 7-digit slave displays—5670-09439-00. Also use C-8365 board and 4-digit display—5670-09448-00.

POWER-SUPPLY BOARD. Use the D-8345 board (equipped with a relay).

SPEECH BOARD. Your C-8228 board must be equipped with the ROMs specified in the **ROM Summary.**

Game Play

S-H-U-T-T-L-E SPELLOUT: S-H-U-T-T-L-E value is selected randomly at the start of each ball. Hitting right-ramp target re-selects value. Hitting "T" drop target last awards 100,000 bonus.

STOP & SCORE: Center-ramp shot freezes rolling numbers in score displays and awards frozen value.

HEAT SHIELD: Center-ramp shot raises heat shield between flippers.

SPINNER: Drop-target three-bank increases spinner value.

EXTRA BALL: Right ramp scores extra ball after multiplier reaches 7X or spinner reaches 7,000.

Game Operation

GAME-OVER MODE. Turn the game ON. The PLAYER-1 score shows 00, player scores display the high score and the GAME-OVER lamp lights. Playfield lamps cycle in **Attract Mode.**

CREDIT POSTING. Insert coins. A sound is produced and the number of credits is displayed. If maximum credits* are exceeded by coin or high score, credits are posted correctly. But the coin-lockout coil de-energizes until the remaining credits are below the maximum. No credits may be won (and coins are rejected) while the coin-lockout coil is de-energized.

GAME START. Push the CREDIT button. A start-up tune is played, a ball is served, and the CREDIT display is reduced by one. PLAYER 1 UP flashes until the first scoring-switch is made, and the BALL-IN-PLAY display shows 1. Additional players may enter the game by pushing the CREDIT button before BALL 2 is displayed.

TILT. With the first closure of the ball-roll or playfield tilts, or the third* closure of the plumb-bob tilt, the player loses the rest of his turn. The slam tilt on the coin door returns the game to the **Game-Over Mode.**

END OF GAME. Match digits* appear in the BALL-IN-PLAY display. Credit* is awarded for a match. Match, high score and game-over sounds are made as appropriate. One replay is awarded for each score you beat in the displays.*

Game Setup

WARNING

This game must be plugged into a properly-grounded outlet to prevent shock hazard and to assure proper game-operation. DO NOT use a "cheater" plug to defeat the ground pin on line cord, and DO NOT cut off ground pin.

ENTERING GAME-OVER MODE. With the coin door closed, plug the game in and turn it ON. The game should come on in **Game-Over Mode.**

1. If the game comes on in the **Bookkeeping Mode** (CREDITS display showing 04, BALL-IN-PLAY display showing 00, and PLAYER-1 display showing the game-identification number) turn the game OFF and ON again.

   A. If the game now comes on in **Game-Over Mode,** bookkeeping totals have been reset to zero.

   B. If the game still comes on in **Bookkeeping Mode,** open the coin door and turn the game OFF and ON twice. (A game without battery power will revert to factory settings.) *Any changes from factory settings must be reentered.*

2. If the game *always* comes on in **Bookkeeping Mode,** troubleshoot the game: With the game OFF, check a *minimum* of 3.5VDC at pin 24 of the CMOS RAM, chip U18 on your CPU Board.

   A. **Less than 3.5 VDC.** Replace the three AA alkaline cells.

   B. **No voltage.** Matching polarity, replace diode D3 *(type 1N4148)* on your CPU Board. Now recheck the voltage at pin 24 of chip U18.

Bookkeeping Mode

(FUNCTIONS 01-17)

1. Set the AUTO-UP/MANUAL-DOWN switch to AUTO-UP and press ADVANCE. Test 04 is indicated in the CREDITS display, Function 00 in the MATCH display, and the game-identification number in the PLAYER-1 display.

2. Press ADVANCE to display desired functions on the MATCH display (See the ***Bookkeeping Table*** below). Now record the corresponding totals (number of coins and total paid-credits) from the PLAYER-1 display. (To review a total that has been advanced past, use MANUAL-DOWN and press ADVANCE).

3. Use MANUAL-DOWN and press ADVANCE to display Function 50 in the MATCH display.

4. Returning to **Game-Over Mode:**

   A. Use AUTO-UP and press ADVANCE.

   B. OR: To zero bookkeeping totals *and* return to **Game-Over Mode,** (1) use AUTO-UP, (2) press the credit button to display 35 in the PLAYER-1 display, and (3) press ADVANCE.

* indicates adjustable feature.

Bookkeeping Table

FUNCTION	PLAYER-1 DISPLAY	PLAYER-2 DISPLAY
04 00	Game Identification (2535 3)	—
04 01	Coins, Left Chute (closest to coin-door hinge)	—
04 02	Coins, Center Chute	—
04 03	Coins, Right Chute	—
04 04	Total Paid-Credits	—
04 05	Special Credits	—
04 06	Replay-Score Credits	—
04 07	Match Credits	—
04 08	Total Credits	5+6+7+13
04 09	Total Extra Balls	—
04 10	Ball Time in Minutes	—
04 11	Total Balls Played	—
04 13	Backup High-Scores	0; 1, 2, 3, 4
04 14	Replay-Level 1	Times Exceeded
04 15	Replay-Level 2	Times Exceeded
04 16	Replay-Level 3	Times Exceeded
04 17	Replay-Level 4	Times Exceeded
04 42	Times ***MULTI-BALL***™ play was achieved	
04 43	Times extra-ball ramp was lit from 7X multiplier	
04 44	Times extra ball ramp lit from drop targets	
04 45	Times S-H-U-T-T-L-E was completed	
04 46	Times S-H-U-T-T-L-E extra-ball was earned	
04 47	Times drop-target three-bank was completed (open gate)	

NOTE: Percentage of free plays for function 04:08 will appear in Player-4 display.

Game-Adjustment Procedure

FUNCTIONS 13-41

Coin door must be open to change settings

1. Use AUTO-UP and press ADVANCE. Test 04 is indicated in the CREDITS display, function 00 in the MATCH display, and the game-identification number in the PLAYER-1 display.

2. To raise the function number in the MATCH display, use AUTO-UP and push ADVANCE. To lower the function number, use MANUAL-DOWN and push ADVANCE.

3. With the desired function indicated in the MATCH display, raise the value in the PLAYER-1 display by using AUTO-UP and pressing the credit button. Repeat this step until all adjustments have been made.

4. Hold down ADVANCE until Function 50 is indicated in the MATCH display. From Function 50 you can return to **Game-Over Mode** or restore factory settings. Perform either of the following as desired.

5. To return to **Game-Over Mode** use AUTO-UP and press ADVANCE.

6. To restore factory settings and zero bookkeeping totals:

   A. Using AUTO-UP press the CREDIT button until 45 is indicated in the PLAYER-1 display.

   B. Press ADVANCE. The game returns to Test 04, function 00.

   C. Use MANUAL-DOWN and press ADVANCE to indicate function 50.

   D. Return to **Game-Over Mode** by using AUTO-UP and pressing ADVANCE.

   E. Press and HOLD High-Score Reset to replace the high score(s) with the backup high score(s). A sound will be made.

High Score(s) to Date

Function 12 determines whether or not the game remembers the highest scores.

No High Score to Date feature:

1. Enter function 12.

2. Press credit button until the Player 1 display is blank.

3. Use AUTO-UP and ADVANCE to exit to game over.

To use the Four Highest Scores feature:

1. Enter function 12.

2. Press credit button until scores appear in ALL FOUR PLAYERS score displays.

3. Use AUTO-UP and ADVANCE to step to function 13. Function 13 has 5 sub-functions (0-4) displayed in the Player 2 score display. Sub-function 0 shows number of credits won from

the High Score to Date feature (in the Player 1 display). Sub-functions 1-4 show (and allow you to adjust) the four Backup High Scores. These are the values that are restored when you press AND HOLD the High-Score Reset button.

4. Use AUTO-UP and the credit button to change any of these values. At game over, 1 credit will be awarded for each of the top 4 scores that is beaten. The maximum number of credits awarded for high-score-to-date is determined by function 40.

5. Setting function 40 to 0 allows the use of the high-score feature WITHOUT awarding any credits.

Game-Adjustment Table

FUNCTION	DESCRIPTION	FACTORY SETTING[1]
12	Highest Scores ?	
13	Backup High Score(s) (Refer to discussion on High Score to Date features)	4,500,000
14	First Replay-Level	1,200,000
15	Second Replay-Level or Second-Highest Score	00
16	Third Replay-Level or Third-Highest Score	00
17	Fourth Replay-Level or Fourth-Highest Score	00
18	Maximum Credits	30
19	Standard and Custom Pricing-Control	01/02
20	Left Coin-Slot Multiplier	01/01
21	Center Coin-Slot Multiplier	04/10
22	Right Coin-Slot Multiplier	01/03
23	Coin Units Required For Credit	01/01
24	Units Required For Bonus Credit	00/00
25	Minimum Coin-Units	00
26	Match 00: Standard Match (awards 10% replays) 01: Match off 02: Fancy Match	00
27	Special 00: Awards credit 01: Awards extra ball 02: Awards points	00/02
28	Replay 00: Awards credit 01: Awards extra ball 02: No award	00/02
29	Maximum Plumb-Bob Tilts (including warnings)	03
30	Number of Balls	03
31	Game-Adjustment #1 - Shuttle-Award Frequency for Special 00: Never 01-05: Not Often 06-10: Occasional 11-15: Frequent	10
32	Game-Adjustment #2 - Shuttle-Award Frequency for Extra Ball 00: Never 01-08: Not Often 09-16: Occasional 17-20: Frequent	14
33	Game-Adjustment #3 - Spinner Setting 00: Spinner award starts at 100; extra ball at 7,000 01: Spinner award starts at 1,000; extra ball at 7,000 02: Spinner award starts at 100; extra ball at 7,000 03: Spinner award starts at 1,000; extra ball at 7,000	01
34	Game-Adjustment #4 - Gate Setting 00: At beginning of each turn, gate is closed 01: At beginning of each turn, gate is open 02: At beginning of game, gate is open. *(Gate position is stored in memory from ball to ball.)*	01

Continued on p. 11

FUNCTION	DESCRIPTION	FACTORY SETTING[1]
35	Game-Adjustment #5 - Flipper-Lane Setting 00: Lanes light with 4X scoring 01: Lanes light with 5X scoring 02: Lanes light with 6X scoring 03: Lanes light with 7X scoring	01
36	Game-Adjustment #6 - Jet-Bumper Setting 00: Jet bumpers light one at a time (whenever the three-bank target is completed.) 01: All three jet bumpers are lit the first time the three-bank target is completed.	00
37	Game-Adjustment #7 - New Or Old-Gate Setting *Note: The old gate energizes to let the ball drain. The new gate energizes to return the ball to the flipper.* 00: For games with old gate 01: For games with new gate	00
38	Game-Adjustment #8 - Spinner-Memory Adjustment 00: Spinner value *isn't* retained in memory 01: Spinner value *is* retained in memory	00
39	Game-Adjustment #9 - Extra Ball Award When U-S-A Is Lit 00: No extra ball 01: Extra ball lights with 7X scoring 02: Extra ball lights after 7X scoring is achieved	01
40	Maximum high-score credits 00: Displays high scores without credit payouts	04/00
41	Maximum Extra-Balls at any time	04
42-48	Foreground Bookkeeping-Totals (See ***Bookkeeping Table)***	
49	Not Used	
50	Special Function 15: **Auto-Cycle Mode** 35: Zero bookkeeping totals 45: Restore factory settings & zero bookkeeping totals	

To use ONE high score value:

1. Enter function 12.

2. Press credit button until a score value appears ONLY in the Player 1 display.

3. Use AUTO-UP and ADVANCE to step to function 13. Function 13 shows the number of credits won from the High Score to Date feature in the Player 2 display. The Player 1 display shows (and allows you to adjust) the Backup High Score to Date. (This is the value that is restored when you press AND HOLD the High-Score Reset button.)

4. Use AUTO-UP and the credit button to change the Backup High Score to Date. At game over, the number of credits indicated by function 40 will be awared if the high score is beaten.

5. Setting function 40 to 0 allows the use of the high-score feature WITHOUT awarding any credits.

NOTES

1. The second factory-setting value is with jumper W5 on the CPU Board removed. (German games).

2. Functions 14 through 17 (replay levels) may be set to any multiple of 100,000 points.

3. Setting functions 14 through 17 (replay levels) to zero disables the replay-score point.

4. High scores are displayed or suppressed by adjusting function 12: Use AUTO-UP and press CREDIT repeatedly until the number of high scores you wish to show (0, 1 or 4) appears on the displays. Now return to **Game-Over Mode.**

Pricing Table

•Indicates standard settings by adjusting ONLY function 19

Coin-Door Mechanism	Games/Price	Function						
		19	20	21	22	23	24	25
Twin Quarter	**•1/25¢, 4/$1**	**1**	**1**	**4**	**1**	**1**	**0**	**0**
or	**•1/50¢, 2/$1**	**3**	**1**	**4**	**1**	**2**	**0**	**0**
Quarter,	•1/50¢, 2/75, 3/4x25¢	0	3	15	3	4	15	0
Dollar,	2/25¢, 8/$1	0	2	8	2	1	0	0
Quarter	1/25¢, 3/50, 6/$1	0	1	4	1	1	2	0
(USA and Canada)	1/25¢, 5/$1	0	1	4	1	1	4	0
	1/50¢, 3/$1	0	1	4	1	2	4	0
1DM, 5DM, 2DM	**•1/1DM, 3/2DM, 10/5DM**	**2**	**1**	**10**	**3**	**1**	**0**	**0**
	1/2x1DM, 1/2DM, 3/5DM	0	3	15	6	5	0	0
(West Germany)	2/1DM, 5/2DM, 14/5DM	0	13	65	26	5	65	0
1F, 5F, 10F (France)	**•1/3x1F, 2/5F, 5/10F**	**4**	**2**	**10**	**20**	**5**	**20**	**0**
25-Cent	•1/25¢, 4/1G	0	1	0	4	1	0	0
1-Guilder (Netherlands)	1/25¢, 5/1G	0	1	0	5	1	0	0
5-Franc,	•1/5F, 2/10F	0	1	0	2	1	0	0
10-Franc (Belgium)	**•1/10F**	**8**	**1**	**0**	**2**	**2**	**0**	**0**
1F, 2F (Switzerland)	**1/1F, 3/2F**	**7**	**3**	**0**	**6**	**2**	**0**	**0**
Twin 100-Yen (Japan)	**2/100Y**	**3**	**1**	**4**	**1**	**2**	**0**	**0**
Twin 100L (Italy)	**•1/200 Lire**	**3**	**1**	**4**	**1**	**2**	**0**	**0**
20¢, $1 (Australia)	**•1/40¢, 3/$1**	**5**	**1**	**0**	**6**	**2**	**0**	**0**
10P, 50P (UK)	**•1/10P, 5/50P**	**6**	**1**	**5**	**1**	**1**	**0**	**0**
Any	Free Play	set function 18 to 0 for free play						

Game Pricing

PRICING MADE EASY. Function 19 allows a *shorthand* method of setting the pricing functions. If a number from one to eight is entered into function 19, a corresponding standard setting (shown in the pricing table above) will be entered into the game. *The rest of the pricing functions are automatically set for that standard.*

FOR CUSTOM SETTINGS first set function 19 to zero. Then set the remaining values according to the pricing table.

THE GAMES : PRICE RATIO is equivalent to the ratio *X : VC*, where:

X = COIN-SLOT MULTIPLIER (the number at function 20, 21 or 22)
V = COIN VALUE
C = COIN UNITS REQUIRED FOR CREDIT (the number at function 23)

For example (assuming quarter chutes) at factory settings the variables produce 1 : 25x1 or one game for 25¢.

UNITS REQUIRED FOR BONUS CREDIT *(function 24)* is the number of games that must be purchased before a free game is awarded. The factory settings for this function is 0, *which means the function is disabled.*

MINIMUM COIN-UNITS *(function 25)* determines the number of games that must be purchased before play may begin. The factory setting for this function is 0. *This 0 means that the MINIMUM COIN-UNITS feature is disabled.*

Diagnostic Procedures

DISPLAY TEST

1. Use MANUAL-DOWN and press ADVANCE. Displays should indicate all 0's.

2. Use AUTO-UP. Displays should sequence from all 0's through all 9's. Comma segments should come on when the odd digits are displayed.

3. To stop cycling use MANUAL-DOWN. Press ADVANCE to step through the tests one number at a time. Use AUTO-UP to resume cycling.

SOUND TEST

1. *(From Display Test)* Use AUTO-UP and press ADVANCE. Test 00 should be indicated in the CREDITS display and the MATCH display should sequence from 00 through 06. A different sound should be produced for the numbers 01-06.

2. To continuously pulse a single sound use MANUAL-DOWN. Press ADVANCE to sequence through sounds one at a time. Use AUTO-UP to resume sequencing.

3. Listen for the following words. Missing or damaged words indicate the failure of a particular ROM as shown below. For part-ordering information, see the **ROM Summary** at the beginning of this manual.

WORDS	ROM NO.	TYPE	BOARD
One	U5	2532	Speech
Two	U5	2532	Speech
Three	U5	2532	Speech
Four	U6	2532	Speech
Liftoff	U6	2532	Speech
Abort	U4	2532	Speech
Ready	U4	2532	Speech
Pilot	U4	2532	Speech
Airlock	U49	27128	CPU
Open	U49	27128	CPU
Close	U49	27128	CPU
Scream (sound)	U49	27128	CPU

LAMP TEST

1. Refer to your ***Lamp-Matrix Table*** for lamp numbers and wiring. CPU-Board connections at jacks 1J6 (columns) and 1J7 (rows) are also shown there.

2. *(From Sound Test)* Use AUTO-UP and press ADVANCE. Test 01 should be indicated in the CREDITS display and all feature-lamps should flash.

SOLENOID TEST

1. Refer to your ***Solenoid Table*** for solenoid numbers and wiring. CPU-Board connections at plugs 1P11 and 1P12 are also shown there.

2. *(From Lamp Test)* Use AUTO-UP and press ADVANCE. Test 02 should be indicated in the CREDITS display. The MATCH display sequences from 01 through 25. Corresponding solenoids are pulsed. The flipper relay is de-energized with subtest 25.

3. Special solenoids (jet bumpers, kickers, etc.) *aren't pulsed during the Solenoid Test.* Instead, you must check these solenoids manually: Press on their trigger switches or pull their switch-trigger lines low.

4. To continuously pulse a single solenoid use MANUAL-DOWN. Press ADVANCE to sequence through controlled solenoids one at a time. Use AUTO-UP to resume sequencing.

SWITCH TEST

1. Refer to the ***Switch-Matrix Table*** for switch numbers and wiring. CPU-Board connections at jacks 1J8 (columns) and 1J9 (rows) are also shown there.

2. *(From Solenoid Test)* Use AUTO-UP and press ADVANCE. Test 03 should be indicated in the CREDITS display with the switch numbers sequencing in the BALL-IN-PLAY display.

   As a switch number is displayed a sound is produced. *As a switch is opened, its number is removed from the sequence.* When all switches are open, the BALL-IN-PLAY display is blank and the sounds stop.

3. **HOLD DOWN EACH SWITCH** so its number is shown at least twice. A sound is produced and a switch number is momentarily indicated in the BALL-IN-PLAY display.

   ROW PROBLEMS. If two switches in a row are indicated with only one switch closed, check for a short between the column wires.

   FOR MULTIPLE INDICATIONS check the column wire for a short to ground.

   COLUMN PROBLEMS. If two switches in a column are indicated with only one switch closed, check for a short between row wires.

4. **PLAYFIELD OR CPU BOARD?** To determine whether the problem is in the playfield or the CPU Board, remove connectors 1P8 and 1P9 from the CPU Board. Now enter the Switch Test. Use a jumper wire to simulate switch operation.

   For example, on the **Switch-Matrix Table** notice that placing a jumper between 1J9-pin 1 and 1J8-pin 2 should produce an indication of switch 09 being closed.

AUTO-CYCLE MODE

1. The ***Auto-Cycle Mode*** permits you to check intermittent problems in the playfield, backbox, cabinet and CPU Board.

2. Set function 50 of Test 04 (**Bookkeeping Mode**) to 15.

3. Press ADVANCE to start the **Auto-Cycle Mode**. This mode repeatedly sequences through the Display Test, Sound Test (00), Lamp Test (01), and Solenoid Test (02).

4. This sequence is repeated until the game is turned off and on.

System-9 Solenoid Table

SOL. NO.	FUNCTION	WIRE COLOR	CONNECTIONS		DRIVER TRANS.	SOLENOID PART NO.
			CPU BOARD	PLAYFIELD/ CABINET		
01	Outhole	GRY-BRN	1P11-1	8P3-1	Q47	SA-23-850-DC
02	Ball-Ramp Release	GRY-RED	1P11-3	8P3-2	Q46	SG 1-23-850-DC
03	Left Eject-Hole	GRY-ORN	1P11-4	8P3-3	Q49	SG 1-23-850-DC
04	Right Eject-Hole	GRY-YEL	1P11-5	8P3-4	Q50	SG 1-23-850-DC
05	"T" Drop-Target	GRY-GRN	1P11-6	8P3-5	Q39	SA 5-24-750-DC
06	3-Bank Drop-Target	GRY-BLU	1P11-7	8P3-6	Q40	SA 3-23-850-DC
07	Up Post	GRY-VIO	1P11-8	8P3-7	Q41	SG 23-850-DC
08	Down Post	GRY-BLK	1P11-9	8P3-8	Q42	SM-29-1100-DC
09	Space Flash-Lamps	BRN-BLK	1P12-I	8P3-9	Q54	-
10	Shuttle Flash-Lamps	BRN-RED	1P12-2	8P3-10	Q55	-
11	General Illumination	BRN-ORN	1P12-4	3P7-1	Q56	5580-09555-00
12	Not Used	BRN-YEL	1P12-5	8P3-12	Q57	-
13	Gate	BRN-GRN	1P12-6	8P3-13	Q58	SZ-35-4000-DC
14	Insert Flash-Lamps	BRN-BLU	1P12-7	8P3-14	Q59	-
15	Bell	BRN-VIO	1P12-8	7P1-17	Q60	SM-29-1000-DC
16	Coin-Lockout Coil	BRN-GRY	1P12-9	7P1-18, 7P2-4	Q61	SM-35-4000-DC
*17	Left Kicker	BLU-BRN	1P-19-7	8P3-17	Q75	SG1-23-850-DC
*18	Right Kicker	BLU-RED	1P-19-4	8P3-18	Q77	SG1-23-850-DC
*19	Left Jet-Bumper	BLU-ORN	1P-19-3	8P3-19	Q79	SG1-23-850-DC
*20	Lower Jet-Bumper	BLU-YEL	1P-19-6	8P3-20	Q81	SG1-23-850-DC
*21	Right Jet-Bumper	BLU-GRN	1P-19-8	8P3-12	Q83	SG1-23-850-DC
*22	Not Used	BLU-BLK	1P-19-9	8P3-22	Q85	-
—	Top Flipper					FL23/600-30-2600-50VDC
—	Right Flipper*	BLU-VIO	1P19-1	7P1-7	-	FL23/600-30-2600-50VDC
—	Left Flipper*	BLU-GRY	1P19-2	7P1-9	-	FL23/600-30-2600-50VDC

***NOTES**

1. Special-switch connections for solenoids 17 thru 21 are as follows:
   17—ORN-BRN—2P1-5, 8P3-24
   18—ORN-RED—2P1-7, 8P3-25
   19—ORN-BLK—2P1-8, 8P3-26
   20—ORN-YEL—2P1-6, 8P3-27
   21—ORN-GRN—2P1-2, 8P3-28

2. **FLIPPER COILS.** This game requires 50-volt flipper coils. For proper operation, the replacement part shown MUST be used.

3. Flipper-button connections:
   Right—ORN-VIO— 2P2-9, 7P1-7
   Left—ORN-GRY—2P2-8, 7P1-9

4. Typical wiring for solenoids and special switches follows.

TYPICAL WIRING

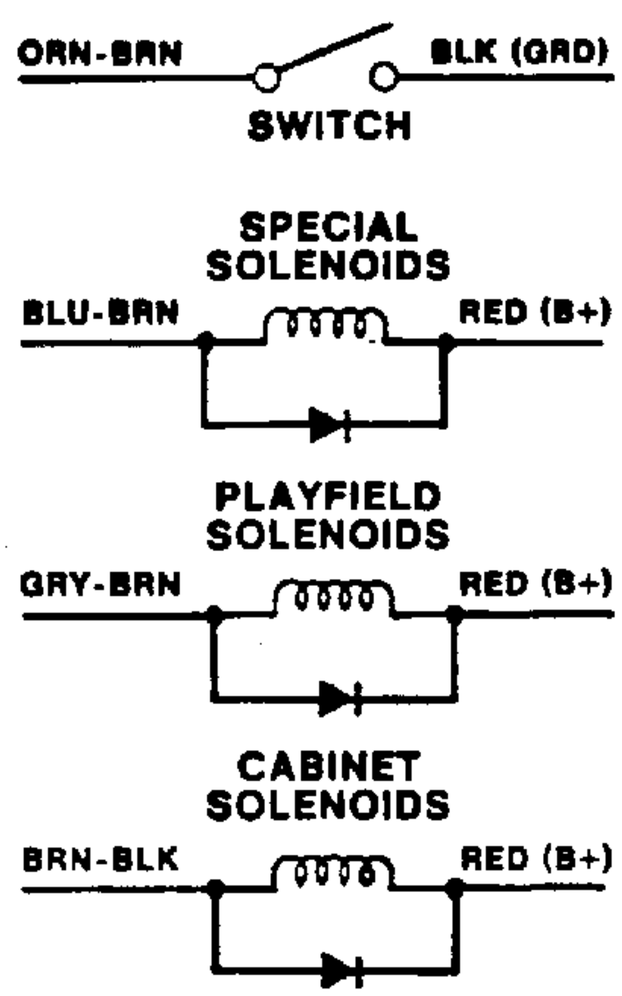

SYSTEM-9 MEMORY-CHIP TEST Press the DIAGNOSTIC button on the CPU Board. The following indications are provided.

0-test passed (game returns to **Game-Over Mode**)
1-U18 CPU-Board lockup; also check memory-protect circuit and U18 CMOS RAM for stuck bits
2-U20 Game ROM 1 faulty
3-U20 Game ROM 1 faulty
4-U19 Game ROM 2 faulty
5-Coin-door closed, memory-protect circuit faulty, or U18 CMOS RAM faulty
No indication-U20 Game ROM 2 faulty

SOUND-SECTION TEST FOR SYSTEM 9

1. **PRESS THE DIAGNOSTIC BUTTON SW2** on the CPU Board. Several electronic sounds should be produced. This sequence of sounds is repeated until the game is turned OFF and back ON.

2. **NO SOUND IN DIAGNOSTIC TEST** (but sounds are present in the Self Test): Check the sound-select inputs (pins 2 through 9 of U 13) to see if they pulse during Test 00.

3. **NO SOUND:** Check the -12V-supply voltage on the CPU Board. If this voltage is low (or AC ripple seems too high)...

   A. Check the gray and gray-green transformer secondary wires for 18.7VAC;

   B. Check the -12V filter-capacitor C7 on the CPU Board;

   C. Check for excessive AC (over 0.75 VAC) across C7 on the CPU Board.

4. **STILL NO SOUND:** Turn the volume control all the way up. With the game turned on, momentarily place a powered-up AC soldering-pencil on the center tap of the volume control. DO NOT use a soldering iron of over 40 watts. Cordless models will NOT work here.

   A. **If you hear a low hum,** the power-amplifier chip (TDA2002), volume control and speaker are okay.

   B. **If you don't hear a hum,** try the test again with the volume control turned halfway up.

CONTROLLED-SOLENOID LOGIC FOR "ON" STATE

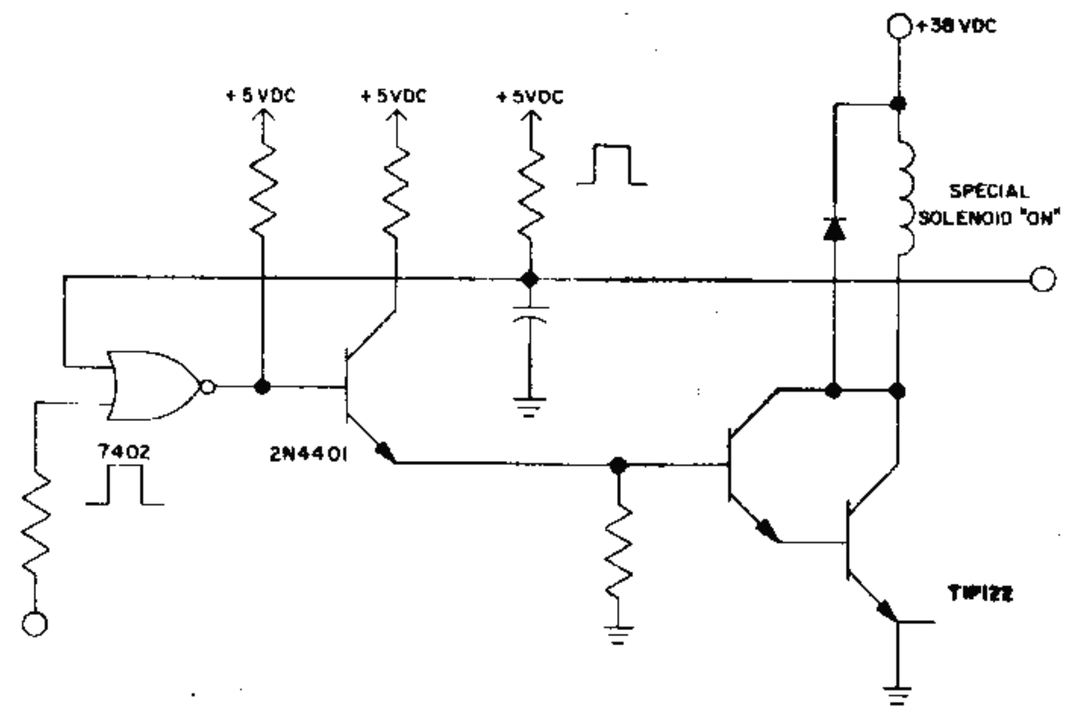

IN THE SOLENOID-OFF STATE, (1) the PIA line goes low. (2) Meanwhile the BLANKING signal remains high. (3) The rest of the signals reverse their phase.

SPECIAL-SOLENOID LOGIC FOR "ON" STATE

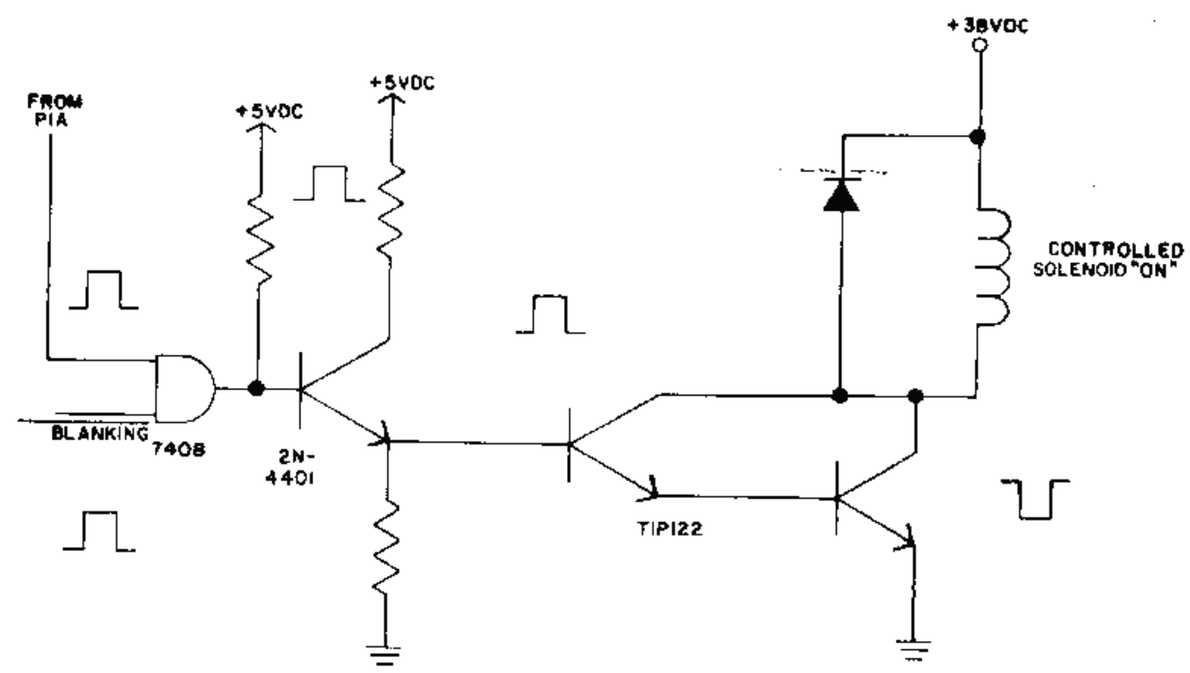

IN THE SOLENOID-OFF STATE, (1) the switch trigger (eg., kicker switch) goes low. (2) Meanwhile the PIA line remains high. (3) The rest of the signals reverse their phase. *(These six solenoids aren't pulsed during the Solenoid Test. Instead, you must check them manually: Press on their trigger switches or pull their switch-trigger lines low.)*

System 9 Lamp-Matrix Table

ROW \ COLUMN	1 YEL-BRN 1J7-1	2 YEL-RED 1J7-2	3 YEL-ORN 1J7-3	4 YEL-BLK 1J7-5	5 YEL-GRN 1J7-6	6 YEL-BLU 1J7-7	7 YEL-VIO 1J7-8	8 YEL-GRY 1J7-9
1 RED-BRN 1J6-1	Game-Over 1	2X 9	S 17	L/Jet Bumper 25	Spinner 1000 33	Outlane X2 Shut Arrow 41	Stop & Score X2 Plfd 49	Bonus 8,000 57
2 RED-BLK 1J6-2	Match 2	3X 10	H 18	R/Jet Bumper 26	Spinner 2000 34	Shuttle 20,000 42	Bonus 1,000 50	Bonus 9,000 58
3 RED-ORN 1J6-3	Tilt 3	4X 11	U 19	Bot Jet Bumper 27	Spinner 4000 35	Shuttle 50,000 43	Bonus 2,000 51	Bonus 10,000 59
4 RED-YEL 1J6-4	High-Score-To-Date 4	5X 12	T 20	Gate Open 28	Ex Ball When Lit 36	Shuttle 100,000 44	Bonus 3,000 52	Bonus 20,000 60
5 RED-GRN 1J6-6	Shoot Again X2 (Insert) 5	6X 13	T 21	U Lane 29	Shoot Again (Pl) 37	50,000 Bonus H/O 45	Bonus 4,000 53	Bonus 30,000 61
6 RED-BLU 1J6-7	Ball-In-Play 6	7X 14	L 22	S Lane 30	Stop & Score X2 (Insrt) 38	100,000 + Out-Lns 46	Bonus 5,000 54	Bonus 40,000 62
7 RED-VIO 1J6-8	Up Post X2 7	Flipper-Return Lns 15	E 23	A Lane 31	Insrt Tail Eng 39	Extra Ball 47	Bonus 6,000 55	Bonus 50,000 63
8 RED-GRY 1J6-9	Release Multiball w/l 8	Left Lock 16	Right Lock 24	Bonus Holdover 32	Insrt Tail Eng X2 40	Scores Special 48	Bonus 7,000 56	Bonus 60,000 64

System 9 Switch-Matrix Table

ROW \ COLUMN	1 GRN-BRN 1J8-1	2 GRN-RED 1J8-2	3 GRN-ORN 1J8-3	4 GRN-YEL 1J8-4	5 GRN-BLK 1J8-5	6 GRN-BLU 1J8-7	7 GRN-VIO 1J8-8	8 GRN-GRY 1J8-9
1 WHT-BRN 1J10-1	Plumb-Tilt 1	Outhole 9	S Target 17	Left Jet 25	Left Drop-Tgt 33	Flipper (Lane Chg) 41	Play-Field Tilt 49	Not Used 57
2 WHT-RED 1J10-3	Ball-Roll Tilt 2	Top Ball Ramp 10	H Target 18	Right Jet 26	Center Drop-Tgt 34	Bot-L Standup Sw 42	Not Used 50	Not Used 58
3 WHT-ORN 1J10-4	Credit Button 3	Middle Ball Ramp 11	U Target 19	Lower Jet 27	Right Drop-Tgt 35	Mid-L Lwr S/U Sw 43	Not Used 51	Not Used 59
4 WHT-YEL 1J10-5	Right Coin 4	Lower Ball Ramp 12	T Drop Tgt 20	Left Outlane 28	Ball-Shooter Lane 36	Mid-L Upr S/U Sw 44	Not Used 52	Not Used 60
5 WHT-GRN 1J10-6	Center Coin 5	Right Outlane 13	T Target 21	U Lane 29	Spinner 37	Ramp (Lower Sw) 45	Not Used 53	Not Used 61
6 WHT-BLU 1J10-7	Left Coin 6	Left Flipper Ret 14	L Target 22	S Lane 30	Ramp Bull's-eye 38	Center Standup Sw 46	Not Used 54	Not Used 62
7 WHT-VIO 1J10-8	Slam Tilt 7	Right Flipper Ret 15	E Target 23	A Lane 31	Left Kicker 39	Upr-R Standup Sw 47	Not Used 55	Not Used 63
8 WHT-GRY 1J10-9	High-Score Reset 8	Left Eject-Hole 16	Right Eject Hole 24	Ramp (Upper SW) 32	Right Kicker 40	Lwr-R Standup Switch 48	Not Used 56	Not Used 64

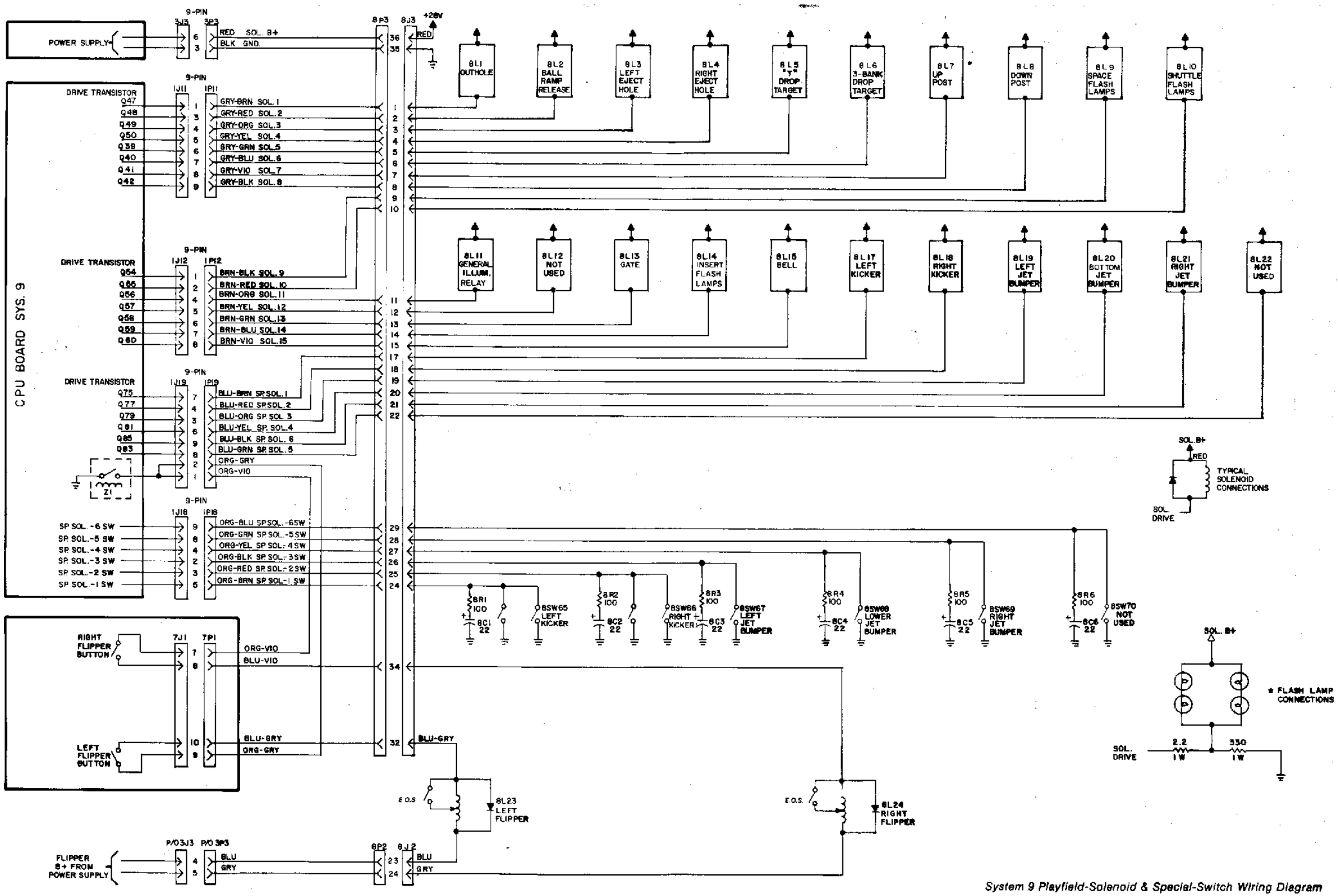

System 9 Playfield-Solenoid & Special-Switch Wiring Diagram 17

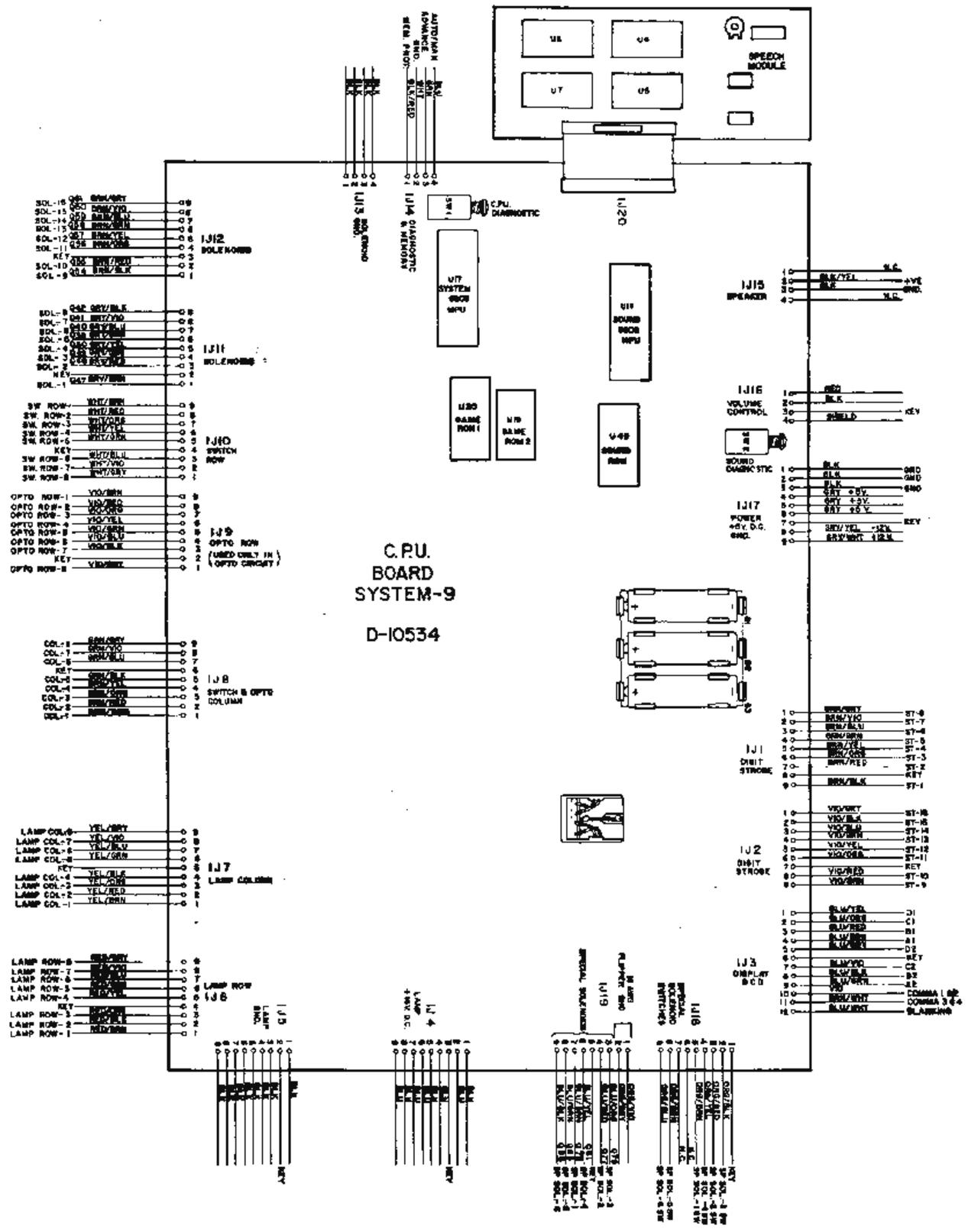

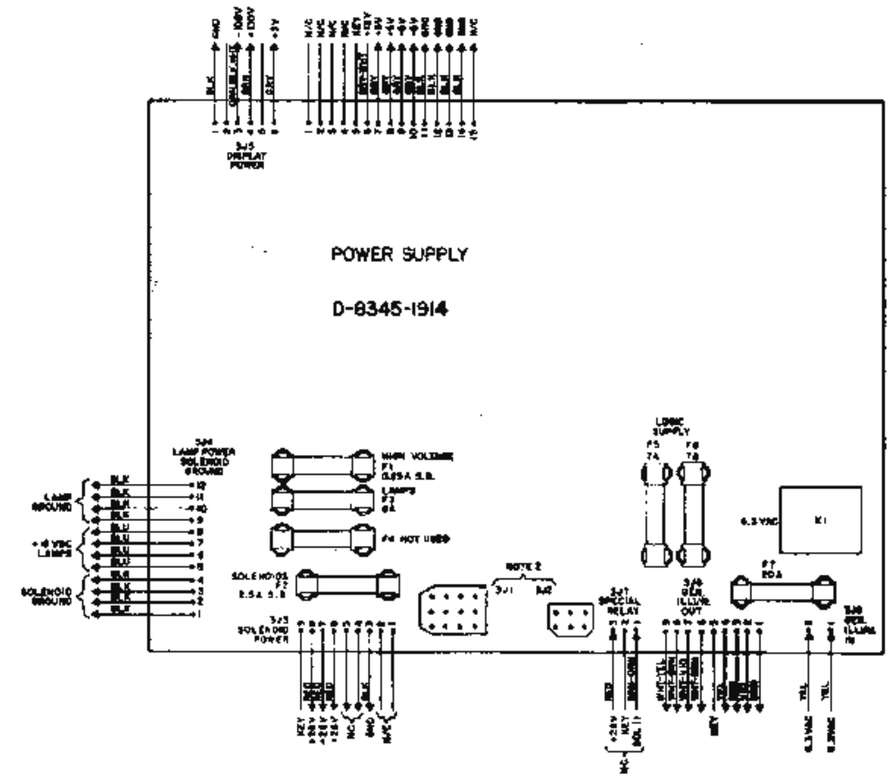

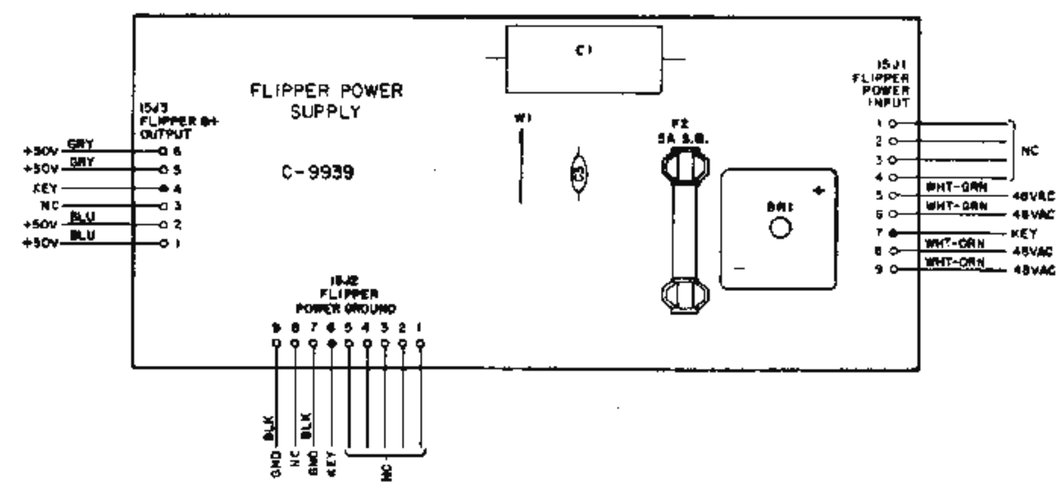

NO. OF CONNECTIONS	WILLIAMS PART NO.	LOCATIONS
4 PIN	5792-09103-00	IJ16
4 PIN	5792-09288-00	IJ13, IJ14, IJ15
9 PIN	5792-09359-00	IJ19
9 PIN	5792-09290-00	IJ1, IJ2, IJ4, IJ5, IJ6, IJ7, IJ8, IJ9 IJ10, IJ11, IJ12, IJ17, IJ18
12 PIN	5792-09103-00	IJ3

BILL OF MATERIAL
FLIPPER POWER SUPPLY C-9939

ITEM NO.	PART NO.	PART DESIGNATION	DESCRIPTION
1	5768-09725-00		BARE P.C. BOARD
2	5100-09690-00	BR1	BRDG. REC. 35A 200V
3	5040-09794-00	C1	CAP. ELECTROLITIC 100 uf 250V AXIAL
4	5043-09072-00	C3	CAP. CERAMIC 0.1 uf 500V
5	5731-09651-00	F2	FUSE 5A S.B. 250V
6	5732-09178-00		FUSE HOLDER
7	5791-09453-00	15J1 & 15J2	9 PIN HEADER
8	5791-09038-00	15J3	6 PIN HEADER

SWITCH LOCATION DIAGRAM

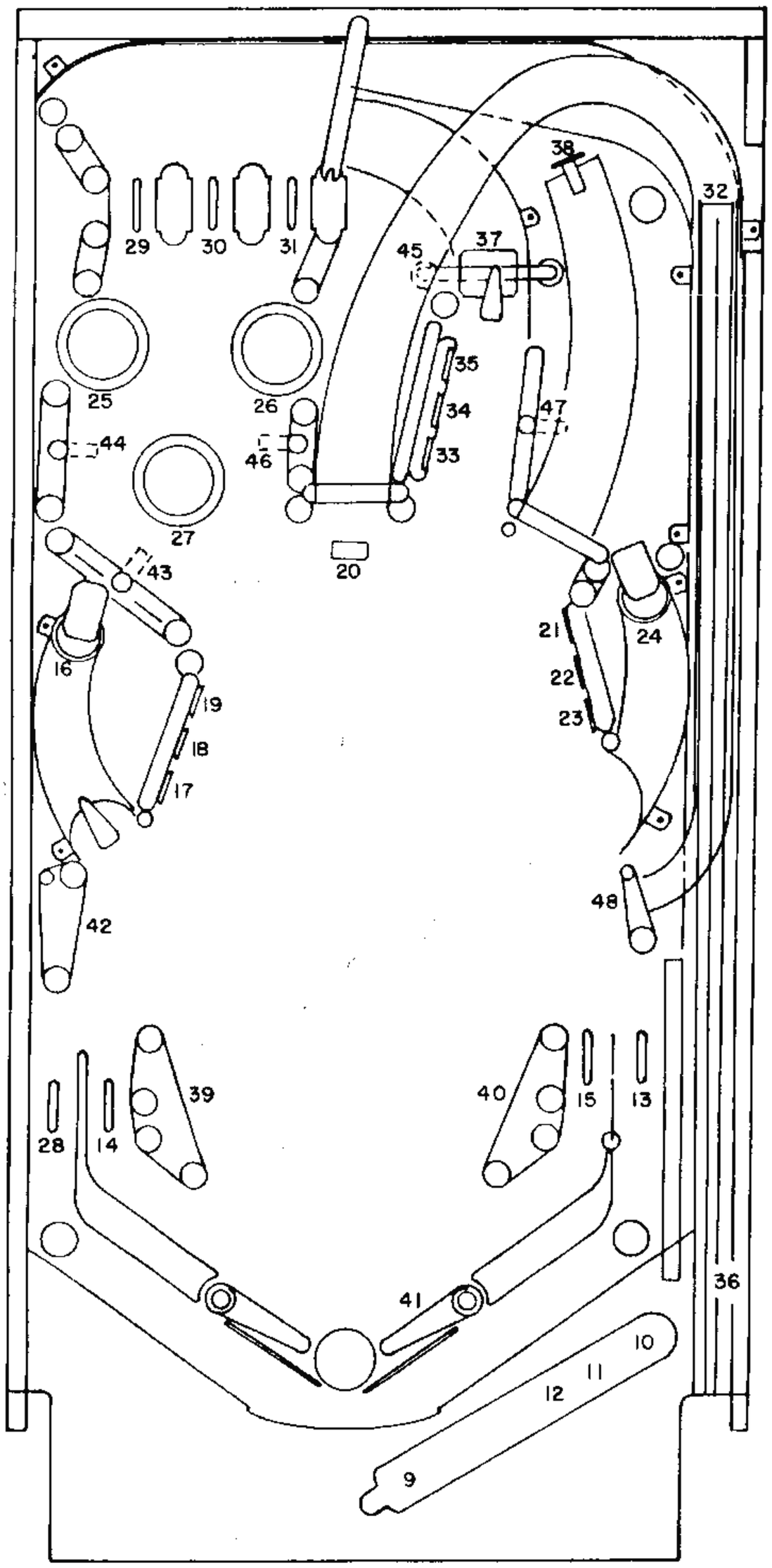

SWITCH NO.	FUNCTION	ASSEMBLY NO.
1	Plumb Tilt	A-8476
2	Ball Roll Tilt	B-8537
3	Credit Button	B-8536
4	Right Coin Switch	5647-10141-00
5	Center Coin Switch	Blank for Domestic
6	Left Coin Switch	5647-10141-00
7	Slam Tilt	SW-1A-127
8	High Score Reset	5641-09369-00
9	Outhole	A-10417-
10	Upper Left Ball Ramp	5647-09957-00
11	Center Ball Ramp	5647-09957-00
12	Lower Right Ball Ramp	H-8659
13	Right Outlane	B-8677
14	Left Flipper Return Lane	B-8410
15	Right Flipper Return Lane	B-8677
16	Left Eject Hole	A-9381-L
17	"S" Target	A-9618
18	"H" Target	A-9618
19	"U" Target	A-9618
20	"T" Target	A-9613
21	"T" Target	A-9618
22	"L" Target	A-9618
23	"E" Target	A-9618
24	Right Eject Hole	A-9381-R
25	Left Jet Bumper	B-8928
26	Right Jet Bumper	B-8928
27	Bottom Jet Bumper	B-8928
28	Left Outlane	B-8410
29	"U" Lane	B-8410
30	"S" Lane	B-8410
31	"A" Lane	B-8410
32	Long Ramp Upper Switch	B-8410-1
33	Left Drop Target	A-9417
34	Center Drop Target	A-9417
35	Right Drop Target	A-9417
36	Ball Shooter Switch	B-8677
37	Spinner	B-8307
38	Ramp Bulls Eye	A-10618
39	Left Kicker	B-8284
40	Right Kicker	B-8284
41	Right Flipper Lane Change	B-9951
42	Bottom Left Standup Switch	B-4834-K
43	Left Lower Standup Switch	B-4834-K
44	Left Upper Standup Switch	B-4834-K
45	Long Ramp Lower Switch	A-10594
46	Center Standup Switch	A-4834-J
47	Upper Right Standup Switch	A-4834-J
48	Lower Right Standup Switch	B-4834-K
49	Playfield Tilt	B-8306
50-64	Not Used	

LAMP LOCATION DIAGRAM

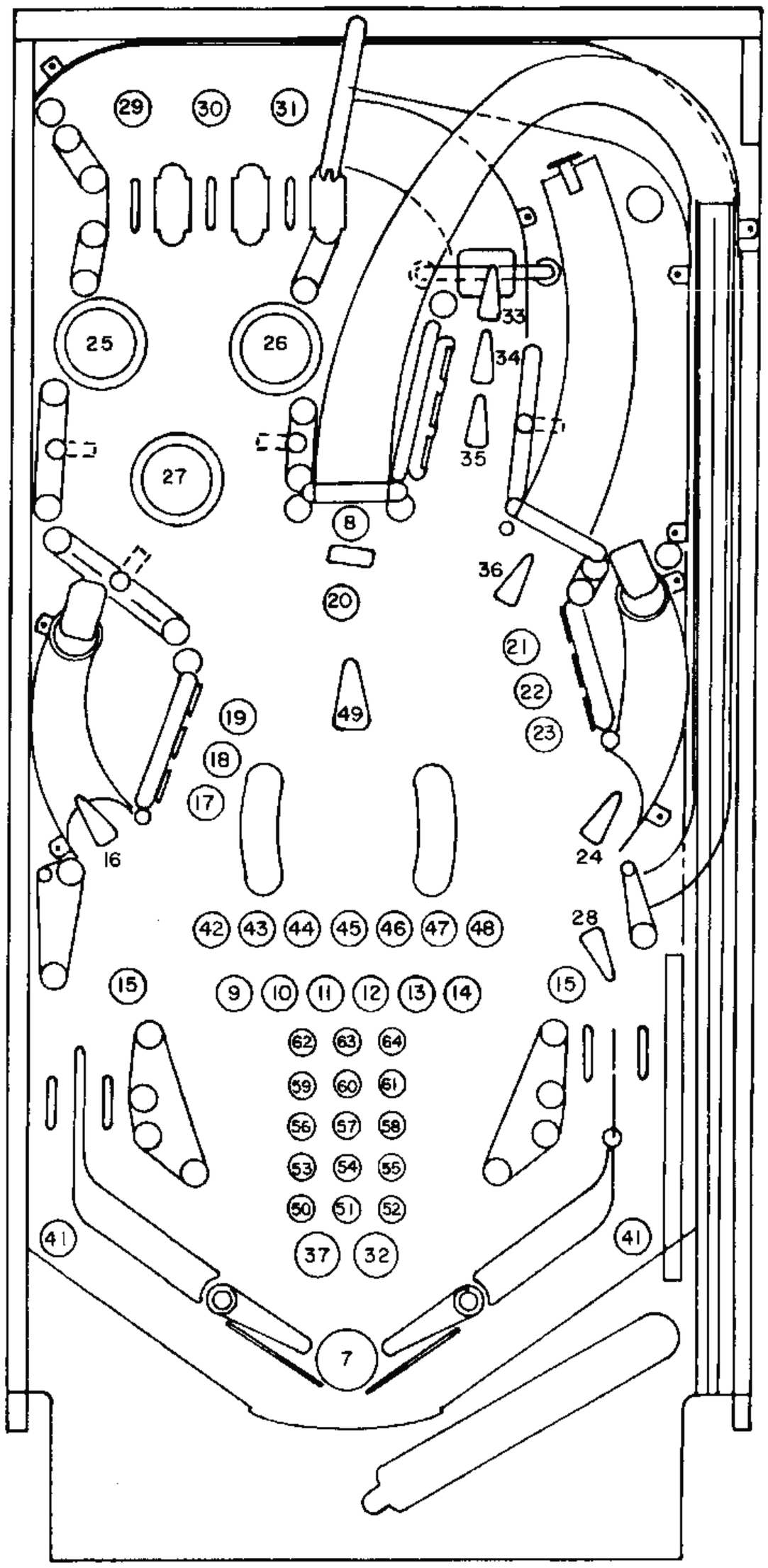

LAMP NO.	FUNCTION	ASSY. NO.
1	Game Over	A-8271
2	Match	"
3	Tilt	"
4	High-Score-To-Date	"
5	Shoot Again	A8271 & A-8262
6	ball-In-Play	A-8271
7	Up Post	A-8882
8	Release	A-8265
9	2X	B-8443
10	3X	"
11	4X	"
12	5X	"
13	6X	"
14	7X	"
15	Flipper Return Lanes	A-8265
16	Left Lock	"
17	"S"	B-8443
18	"H"	"
19	"U"	"
20	"T"	A-8449
21	"T"	B-8443
22	"L"	"
23	"E"	"
24	Right Lock	A-8265
25	Left Jet Bumper	24-6416 & 24-6549
26	Right Jet Bumper	24-6416
27	Bottom Bumper	"
28	Gate Open	A-8265
29	"U" Lane	B-9558-40
30	"S" Lane	"
31	"A" Lane	"
32	Bonus Holdover	A-8265
33	Spinner 1,000	"
34	Spinner 2,000	A-8449
35	Spinner 4,000	"
36	Extra Ball When Lit	A-8265
37	Shoot Again	"
38	Stop & Score	A-8271 & A-8262
39	Insert Panel	A-8271
40	Insert Panel	"
41	Outlane Shuttle Arrow	A-8265
42	Shuttle 20,000	B-9558-21
43	Shuttle 50,000	"
44	Shuttle 100,000	"
45	50,000 & Bonus H/Over	"
46	100,000 + Outlanes	B-8443
47	Extra Ball	"
48	Scores Special	"
49	Stop & Score	A-8265
50	1,000 Bonus	B-9558-33
51	2,000 Bonus	B-9558-32
52	3,000 Bonus	B-9558-33
53	4,000 Bonus	See 50
54	5,000 Bonus	See 51
55	6,000 Bonus	See 52
56	7,000 Bonus	See 50
57	8,000 Bonus	See 51
58	9,000 Bonus	See 52
59	10,000 Bonus	See 50
60	20,000 Bonus	See 51
61	30,000 Bonus	See 52
62	40,000 Bonus	See 50
63	50,000 Bonus	See 51
64	60,000 Bonus	See 52

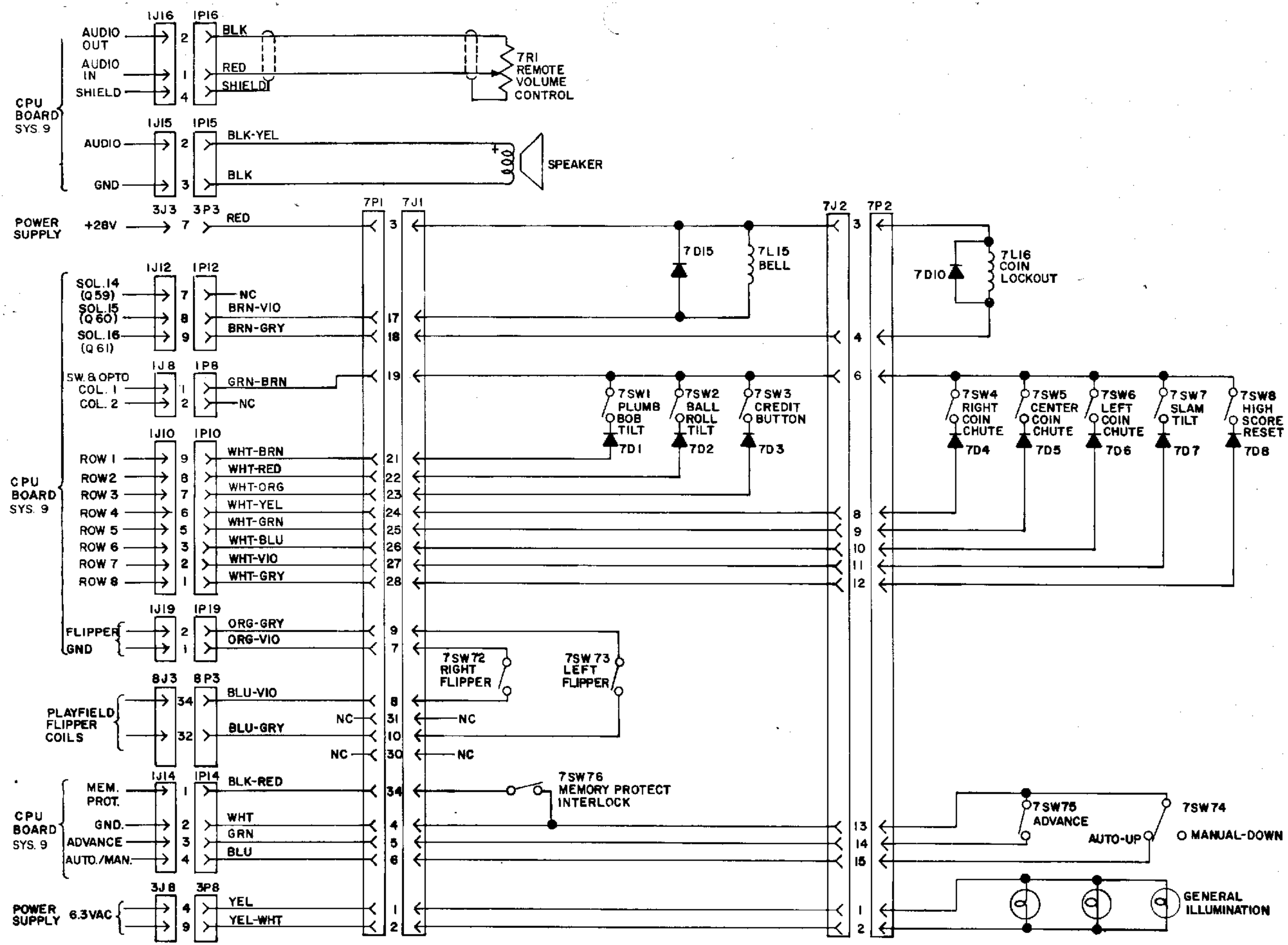

SYSTEM 9 CABINET WIRING DIAGRAM

PLAYFIELD ASSEMBLIES

RAMP FINAL ASSY: D-10654

1.	A-10591	Ball Gate Assy
2.	A-10647	Sw & Cable Assy
3.	B-10648	Shuttle & Sw Assy
4.	01-3670-1	Switch Plate - Flat
5.	03-7925	Shuttle Ramps
6.	12-6653	Sw Actg wire Form
7.	4106-01033-08	SMS #6 x 1/2 P-TH-A
8.	31-1006-535-2	Scrnd Plastic
9.	31-1006-535-6	Scrnd Plastic
10.	31-1006-535-7	Scrnd Plastic
11.	31-1006-535-8	Scrnd Plastic
12.	4005-01051-12	MS #5-40 x 3/4 SL-RH
13.	4005-01052-04	MS #5-40 x 3/4 SL-PH
14.	4106-01018-04	SMS #6 x 1/4 P-PH-ST
15.	4405-01117-00	Nut #5-40 Hex

1-BANK DROP TGT ASSY: D-9612

1.	01-7572	Tgt Retaining Bar
2.	01-7689	Coil Support Brkt
3.	01-7575-2	Drop Tgt Frame
4.	01-7688	Adjustment Brkt - RS
5.	03-7479	Drop Tgt Guide
6.	10-128	Kicker Spring
7.	A-9548	Coil Stop Assy
8.	A-9613	Sw & Brkt Assy
9.	B-9534	Drop Tgt Assy
10.	B-9744	Reset Fgr Sub-Assy
11.	SA5-24-750-DC	Coil Assy
12.	4006-01003-14	MS #6-32 x 7/8 Lg. P-PH-S
13.	4006-01017-04	MS #6-32 x 1/4 Lg. P-RH-S
14.	4106-01001-07	SMS #6 x 7/16 Lg. P-PH-A
15.	4006-01005-06	MS #6-32 x 3/8 Lg. P-PH
16.	4700-00076-00	.156 ID x .312 OD x .0418 THK
17	4701-00002-00	LW # 6, Split

3-BANK DROP TGT ASSY: D-9355

1.	A-8037	Coil Stop Assy
2.	B-8451	Drop Tgt Assy
3.	B-9354	Sw Mtg Brkt & Sw Assy
4.	SA3-23-850-DC	Coil Assy
5.	02-3972	Drop Tgt Plunger
6.	01-6450-3	Tgt Retaining Bar
7.	01-6451-3A	Coil Support Angle
8.	01-7036	Reset Plate
9.	01-7567	Drop Tgt Frame
10.	03-7479	Drop Tgt Guide
11.	4006-01017-04	MS #6-32 x 1/4 P-RH-S
12.	4006-01003-15	MS #6-32 x 15/16 P-PH-S
13.	4106-01001-07	SMS #6 x 7/16 P-PH-A
14.	4410-01132-00	Nut #10-32
15.	4700-00023-10	13/64 x 5/8 16 Ga Washer

POST AND GATE ASSY: A-10607

1.	02-3133	Post
2.	12-6652	Gate
3.	20-8846	Palnut
4.	20-8713-25	Crescent Ring

BALL GATE ASSY-COMP: B-10609

1.	B-10608	Ball Gate Sub-Assy
2.	A-10606	Armature Assy
3.	SZ-35-4000-DC	Coil Assy
4.	10-96	Spring
5.	4008-01053-06	MS #8-32 x 3/8 SL-BHBR
6.	4701-00003-00	LW #8, Split
7.	4700-00089-00	.172 x 7/16, 16 Ga

SPIN TARGET ASSY: B-9655

1.	01-7649	Mounting Brkt
2.	03-7796	Tgt Shaft Washer
3.	12-6620	Sw Actuator Wire
4.	31-1019-535	Screened Target

BALL EJECT ASSY, L/R: B-9361

1.	A-6949-L/R	Spring Plate
2.	A-6950-L/R	Mounting Brkt
3.	A-7471-L/R	Eject Cam Assy
4.	A-8050	Coil Plunger
5.	10-320	Spring-Eject
6.	12-6227	Hair Pin Clip
7.	4700-00030-00	17/64 x 1/2, 15 Ga
8.	4700-00103-00	17/64 x 1/2 x .015

AUTO BALL RETURN ASSY: B-8039

1.	A-6378	Mouting Plate Assy
2.	A-8335	Coil Plunger Assy
3.	4006-01003-03	MS #6-32 x 3/16
4.	A-6889	Kicker Lever Assy
5.	A-8038	Coil Stop Assy
6.	SA-23-850-DC	Coil Assy
7.	03-7176-1	Striker Ring
8.	10-101-4	Spjring Reset
9.	20-8712-25	"E" Ring 1/4

JET BUMPER COIL ASSY: B-9415

1.	B-7417	Brkt & Stop Assy
2.	01-1747	Coil Retaining Brkt
3.	01-5492	Armature Link Steel
4.	01-5493	Armature Link Bakelite
5.	02-3406-1	Coil Plunger
6.	10-326	Armature Spirng
7.	SG1-23-850-DC	Coil w/ Nylon Tube
8.	4006-01017-04	MS #6-32 x 1/4 P-RH-S

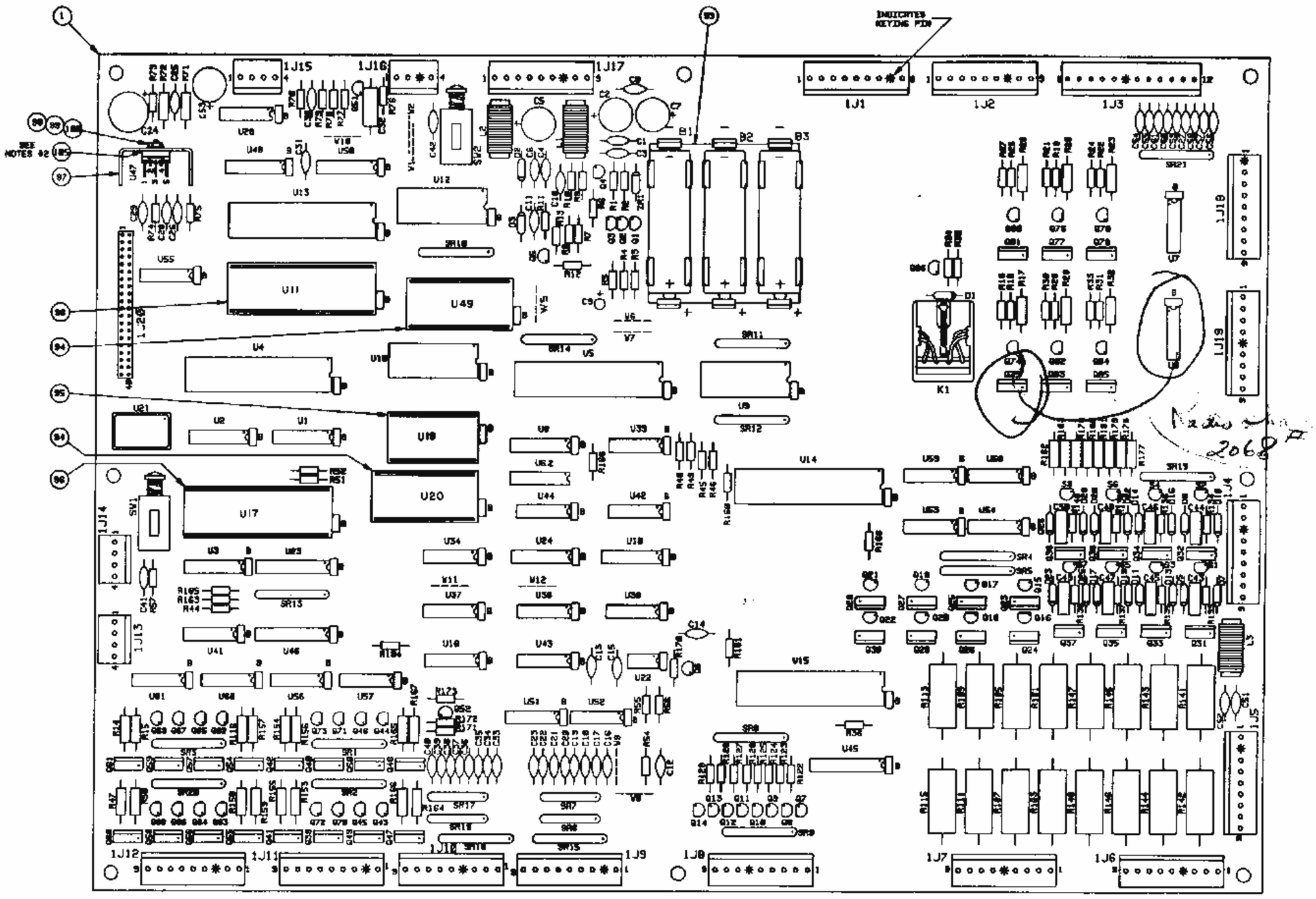

NOTES:

1. FOR SCHEMATIC, REFER TO DRAWING NO. 16-8923.
2. USE THERMAL COMPOUND BETWEEN ITEM #24 (U47) AND ITEM #97.
3. FOR GERMAN GAMES CUT W5.

ITEM	PART NO.	PART DESIGNATION	DESCRIPTION	QTY.
10				
9				
8				
7				
6	SEE CHART		LABEL - PCB ASSY. ID.	1
5	SEE CHART	U49	SOUND ROM ASSY.	1
4	SEE CHART	U20	GAME ROM-1 ASSY.	1
3	SEE CHART	U19	GAME ROM-2 ASSY.	1
2	5400-09250-09	U11, U17	I.C., 6808, MICROPROCESSOR	2
1	D-10534		CPU PCB SUB-ASSEM.	1

BILL OF MATERIALS

CHART						
NAME OF GAME	ASSY. NO.	ITEM 3	ITEM 4	ITEM 5	ITEM 6	JUMPERS TO BE DELETED
STAR-LIGHT	D-10536 -530	A-5343-10761	A-5343-10760	A-5343-10762	16-8850 -117	W12
SPACE SHUTTLE	D-10535 -535	NOT USED	A-5343-10767	A-5343-10768	16-8850 -120	W10 W11
STRIKE ZONE	D-10535 -1916	A-5343-10794	A-5343-10793	A-5343-10795	16-9850 -124	W12

NOTES:

1. FOR SCHEMATIC, REFER TO DWG. 16B-8923.
2. DIODE, 1N4001. D1, D5, D7, D8, D10, D11, D13, D14, D16, D17, D18, D20, D22, D23, D25, D28, D29.
3. RESISTOR, 4.7K OHM. R4, R36, R44, R45, R48, R51, R52, R160, R161, R163, R169, R170, R172, R184, R185.
4. RESISTOR, 1.0K OHM. R2, R3, R8, R11, R57, R74, R75, R133 THRU R140, R175.
5. CAPACITOR, .01 MFD. BYPASS (B) OR CAPACITORS, C10, C11, C13, C30, C41, C50 THRU C66, C42, C27.
6. FOR ITEMS 053 AND 055 RESISTORS MUST BE MOUNTED 1/8" ABOVE SURFACE OF PCB.
7. RESISTOR, 68 OHM 1/2 WATT. R14, R15, R17, R20, R23, R26, R29, R32, R47, R50, R116, R153 THRU R159, R154 THRU R167.
8. RESISTOR, 27 OHM 2 WATT. R101, R102, R105, R107, R109, R111, R113, R115.
9. TRANSISTOR, TIP122. Q31 THRU Q42, Q47 THRU Q50, Q54 THRU Q61, Q75, Q77, Q79, Q81, Q83, Q85.
10. TRANSISTOR, 2N4401. Q1, Q2, Q3, Q5, Q43 THRU Q46, Q62 THRU Q73, Q74, Q76, Q78, Q80, Q82, Q84, Q86.
11. JUMPERS: STANDARD W2, W6, W7, W9, W10, W11, W5. OPTIONS FOR SPEECH DELETE W10 FOR 27128 (GAME) DELETE W11 ADD W12
12. USE THERMAL COMPOUND BETWEEN ITEM #24 (U47) AND ITEM #97.
13. RESISTOR, 2.7K OHM. R19, R21, R24, R27, R30, R33, R35.
14. 3-PIN CONNECTOR. 1J1, 1J2, 1J4 THRU 1J12, 1J17, 1J18, 1J19.

ITEM	PART NO.	PART DESIGNATION	DESCRIPTION	QTY.
110				
109				
107				
106				
105				
104				
103				
102				
101				
100				
99				
98				
97				
96				
95				
94				
93				
92				
91				
90	5441-09653-00	SW1, SW2	PUSH BUTTON SWITCH SPST	2
89				
88	5043-09650-00	C15	CAPACITOR, AXIAL, .247 MFD, 50V +/-20%	1
87	5041-09031-00	C12	CAP., TANT., AXIAL, 1 MFD, 25V +/-20%	1
86	5040-09433-00	C9	CAP., ELECT., RADIAL, 22 MFD, 10V +50-10%	1
85	5043-09605-00	C14, C33 THRU C44, C54, C55, C61	CAPACITOR, AXIAL, .470 MFD, 50V +/-20%	12
84	5045-09786-00	C43 THRU C53	CAP., POLYCARBONATE, RAD, .1 MFD, 100V +/-10%	9
83	5040-09776-00	C24	CAP., ELECT., RADIAL, 470 MFD, 16V +50-10%	1
82	5040-09421-00	C2, C5, C7, C55	CAP., ELECT., RADIAL, 100 MFD, 25V +50-10%	4
81	5043-09644-00	C31, C16 THRU C29	CAPACITOR, AXIAL, 47 MFD, 50V +/-20%	9
80	5040-09343-00	C32	CAP., ELECT., AXIAL, LOW L, 10 MFD, 20V +/-20%	1
79	5043-09596-00	C25, C26, C29, C51, C52	CAPACITOR, AXIAL, .1 MFD, 50V +/-20%	5
78	5043-09645-00	C1, C3, C4, C6, C8, C28	CAPACITOR, AXIAL, 1K MFD, 50V +/-20%	6
77	5043-09598-00	SEE NOTE #5	CAPACITOR, AXIAL, .01 MFD, 50V +80-20%	50
76	5818-09792-00	SR2, SR20	SIP, 9R 10-PIN, 2.7K OHM, .125 W/R 5%	2
75				
74	5819-10581-00	U62	DIP, 8R 16-PIN, 270 OHM, .125 W/R 5%	1
73	5819-09780-00	SR6, SR7, SR17, SR18	SIP, 4R 8-PIN, 1K OHM 5%	4
72	5819-09669-00	SR9, SR10	SIP, 8R 10-PIN, 1.0K OHM, .125 W/R 5%	2
71	5818-10472-00	SR15	SIP, 9R 13-PIN, 3.3K OHM, .125 W/R 5%	1
70	5819-09785-00	SR5	SIP, 9R 10-PIN, 2.2K OHM 1/4 WATT 5%	1
69	5819-09688-00	SR1, SR3, SR16	SIP, 8R 10-PIN, 560 OHM, .125 W/R 5%	3
68	5819-09302-00	SR4, SR8, SR11 THRU SR14, SR21	SIP, 8R 10-PIN, 4.7K OHM, .125 W/R 5%	7
67	5819-09783-00	SR19	SIP, 8R 10-PIN, 6.8K OHM, .125 W/R 5%	1
66	5818-10831-00	R176 THRU R183	RESISTOR, C.F., 1.2K OHM 5% 1/4 WATT	8
65	5818-09805-00	R112 THRU R119	RESISTOR, C.F., 1.5K OHM 5% 1/4 WATT	8
64	5818-09679-00	R77	RESISTOR, C.F., 5.6K OHM 5% 1/4 WATT	1
63	5818-09416-00	R46, R49	RESISTOR, C.F., 470 OHM 5% 1/4 WATT	2
62	5818-09168-00	R7, R8	RESISTOR, C.F., 220 OHM 5% 1/4 WATT	2
61	5818-10178-00	R12	RESISTOR, C.F., 47 OHM 5% 1/4 WATT	1
60	5818-10171-00	R13	RESISTOR, C.F., 56 OHM 5% 1/4 WATT	1
59	5818-10093-00	R6, R10	RESISTOR, C.F., 390 OHM 5% 1/4 WATT	2
58	5818-09161-00	R73	RESISTOR, C.F., 2.2 OHM 5% 1/4 WATT	1
57	5818-09101-00	R71	RESISTOR, C.F., 1 OHM 5% 1/2 WATT	1
56	5818-09361-00	R72	RESISTOR, C.F., 220 OHM 5% 1/2 WATT	1
55	5818-09399-00	SEE NOTES 8A AND 8B	RESISTOR, C.F., 82 OHM 5% 2 WATT	8
54	5818-09395-00	SEE NOTE #7	RESISTOR, C.F., 68 OHM 5% 1/2 WATT	22
53	5812-09837-00	R141 THRU R148 SEE NOTE #6	RESISTOR, WIREWOUND, .4 OHM 5% 5 WATT	8
52	5818-09787-00	SEE NOTE #13	RESISTOR, C.F., 2.7K OHM 5% 1/4 WATT	7
51	5818-09303-00	R76	RESISTOR, C.F., 5.6K OHM 5% 1/4 WATT	1
50	5818-09806-00	R54	RESISTOR, C.F., 6.8K OHM 5% 1/4 WATT	1
49	5818-09854-00	R1, R34, R171	RESISTOR, C.F., 10K OHM 5% 1/4 WATT	3
48	5818-09803-00	R55, R78, R79, R78, R160	RESISTOR, C.F., 3.3K OHM 5% 1/4 WATT	5
47	5818-09113-00	R54	RESISTOR, C.F., 33K OHM 5% 1/4 WATT	1
46	5818-09804-00	SEE NOTE #4	RESISTOR, C.F., 1.0K OHM 5% 1/4 WATT	16
45	5818-09891-00	SEE NOTE #3	RESISTOR, C.F., 4.7K OHM 5% 1/4 WATT	15
44	5818-09534-00	SEE NOTE #11	RESISTOR, C.F., 0 OHM 1/4 WATT	7
43	5818-09839-00	R5	RESISTOR, C.F., 10 OHM 5% 1/4 WATT	1
42	5818-09932-00	R16, R18, R22, R25, R28, R31	RESISTOR, C.F., 560 OHM 5% 1/4 WATT	6
41				
40	5075-09018-00	ZR1	ZENER DIODE, 1N5996B 6.8V .5W	1
39	5070-09206-00	D2	SILICON DIODE, 1N5817 1.0 A.	1
38	5070-09913-00	D3	SILICON DIODE, 1N4148 150 mA.	1
37	5070-09259-00	SEE NOTE #2	DIODE, 1N4001	17
36	5130-09014-00	S1 THRU S8	SILICON CONTROL RECT., 2N5060 .8A 30V	8
35	5190-09816-00	Q4, Q6	TRANSISTOR, TO-92, 2N4403, PNP	2
34	5190-10263-00	Q7 THRU Q14 Q51, Q52	TRANSISTOR, TO-92, 2N3904, PNP	10
33	5190-09930-00	SEE NOTE #10	TRANSISTOR, TO-92, 2N4401, NPN	27
32	5190-09410-00	SEE NOTE #9	TRANSISTOR, TO-220, TIP122, NPN	30
31	5191-09979-00	Q73 THRU Q80	TRANSISTOR, TO-220, TIP42, PNP	8
30	5192-09976-00	Q15 THRU Q22	TRANSISTOR, TO-92, 2N6427 NPN DARLINGTON	8
29	5200-09940-00	U6, U7	I.C., 7402, QUAD 2-INPUT NOR	2
28	5210-09155-00	U51, U52	I.C., MC14011, QUAD 2-INPUT NAND	2
27	5200-09374-00	U58, U59	I.C., 7406, HEX. INVERTER OPEN C.	2
26	5200-09973-00	U55, U54, U56, U57, U60, U61	I.C., 7400, QUAD 2-INPUT AND	6
25	5201-09667-00	U45	I.C., 74LS244, OCTAL BUFFER	1
24	5370-09156-00	U47	I.C., TDA2002, AUDIO AMPLIFIER	1
23	5310-09063-00	U12	I.C., 6810, 128 X 8 STATIC RAM	1
22	5201-09745-00	U50	I.C., 74LS138, 3 TO 8 LINE DECODER	1
21	5371-09158-00	U48	I.C., MC1488, D/A CONVERTER	1
20	5201-09486-00	U46	I.C., 74LS374, OCTAL D-TYPE FLIP FLOP	1
19	5201-09500-00	U16	I.C., 74LS32, QUAD 2-INPUT OR	1
18	5201-09499-00	U55	I.C., 74LS00, QUAD 2-INPUT NAND	1
17	5200-09015-00	U41	I.C., 7404, HEX. INVERTER	1
16	5201-09256-00	U26, U42	I.C., 74LS10, TRIPLE 3-INPUT NAND	2
15	5201-09247-00	U38, U39	I.C., 74LS02, QUAD 2-INPUT NOR	2
14	5201-09745-00	U34, U36, U37	I.C., 74LS08, QUAD 2-INPUT AND	3
13	5310-09256-00	U18	I.C., 4020, COUNTER 14 BIT CMOS	1
12	5431-09449-00	U22	I.C., MC1455, TIMER	1
11	5521-10506-00	U21	OSCILLATOR, 4 MHZ.	1
10	5671-09411-00	U44	I.C., MAN72A, 7 SEG. LED DISPLAY	1
9	5200-09407-00	U8	I.C., 7447, BCD TO 7 SEG. DECODER	1
8	5201-09248-00	U24	I.C., 74LS139, DUAL 2 TO 4 LINE DECODER	1
7	5200-09812-00	U9	I.C., 74154, 4 TO 16 DECODER	1
6	5340-10133-00	U10	I.C., 6512-2, 2K X 8 CMOS ST. RAM	1
5	5430-09372-00	U4, U5, U13, U14, U15	I.C., 6820/6821, PIA	5
4	5201-09308-00	U29	I.C., 74LS245, OCTAL BUS TRANSCEIVER	1
3	5370-09389-00	U1, U2, U3	I.C., 8797, HEX. TRISTATE BUFFER	3
2	5200-09873-00	U43	I.C., 7400, QUAD 2-INPUT NAND	1
1	5134-10549-00		BARE PC BOARD	1

BILL OF MATERIAL

REV	REVISION OR CHANGE	DRAWN BY
	NEW PART RELEASE	

DO NOT SCALE WORK TO DIMENSIONS SHOWN

REMOVE BURRS – BREAK SHARP EDGES

TOLERANCES UNLESS OTHERWISE SPECIFIED

MATERIAL: NONE

WILLIAMS ELECTRONICS, INC.
3401 N. CALIFORNIA AVE. CHICAGO 6

NAME: CPU, SYSTEM-9 SUB-ASSEMBLY

SCALE 1/1 | SHEET 1 OF 2 | PART NO. D-10534 | REV

D-10534

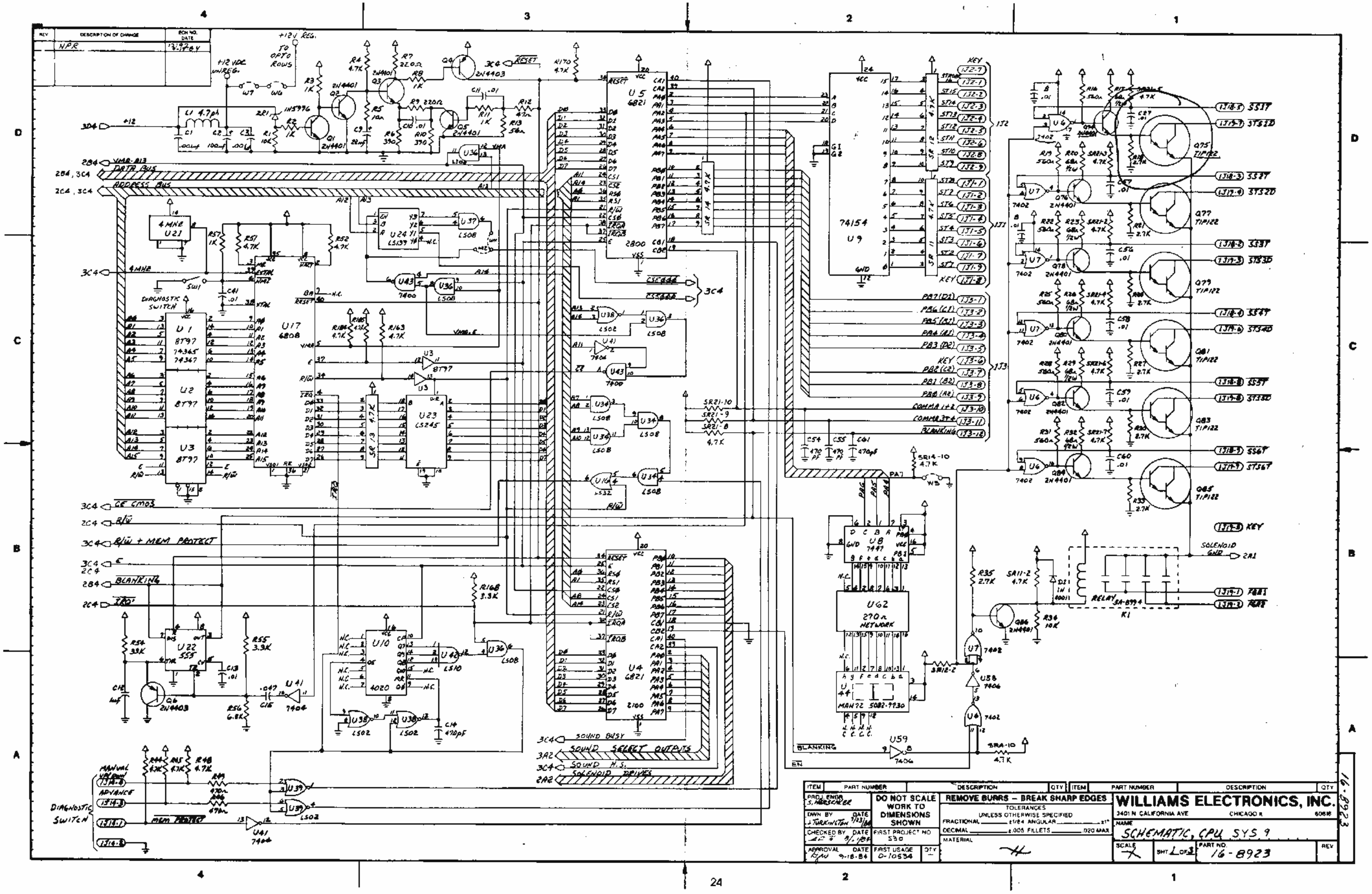
REV
DESCRIPTION OF CHANGE
ECN NO.
DATE
NPR
+12V REG.
TO OPTO ROWS
+12 VDC UNREG.
DATA BUS
ADDRESS BUS
4 MHZ
U21
DIAGNOSTIC SWITCH
U1 8797
U2 8797
U3 8797
U17 6808
U5 6821
U4 6821
U10 4020
U22 555
U23 LS245
74154 U9
U8 7447
U62 270Ω NETWORK
U44 MAN72 5082-7730
RELAY SA-8994
K1
SOLENOID GND
SOUND BUSY
SOUND SELECT OUTPUTS
SOUND H.S.
SOLENOID DRIVES
MANUAL
ADVANCE
DIAGNOSTIC SWITCH
MEM PROTECT
BLANKING
KEY
REMOVE BURRS – BREAK SHARP EDGES
DO NOT SCALE WORK TO DIMENSIONS SHOWN
TOLERANCES UNLESS OTHERWISE SPECIFIED
WILLIAMS ELECTRONICS, INC.
3401 N. CALIFORNIA AVE CHICAGO IL 60618
SCHEMATIC, CPU SYS 9
PART NO. 16-8923
SCALE
SHT 1 OF 3
REV
16-8923

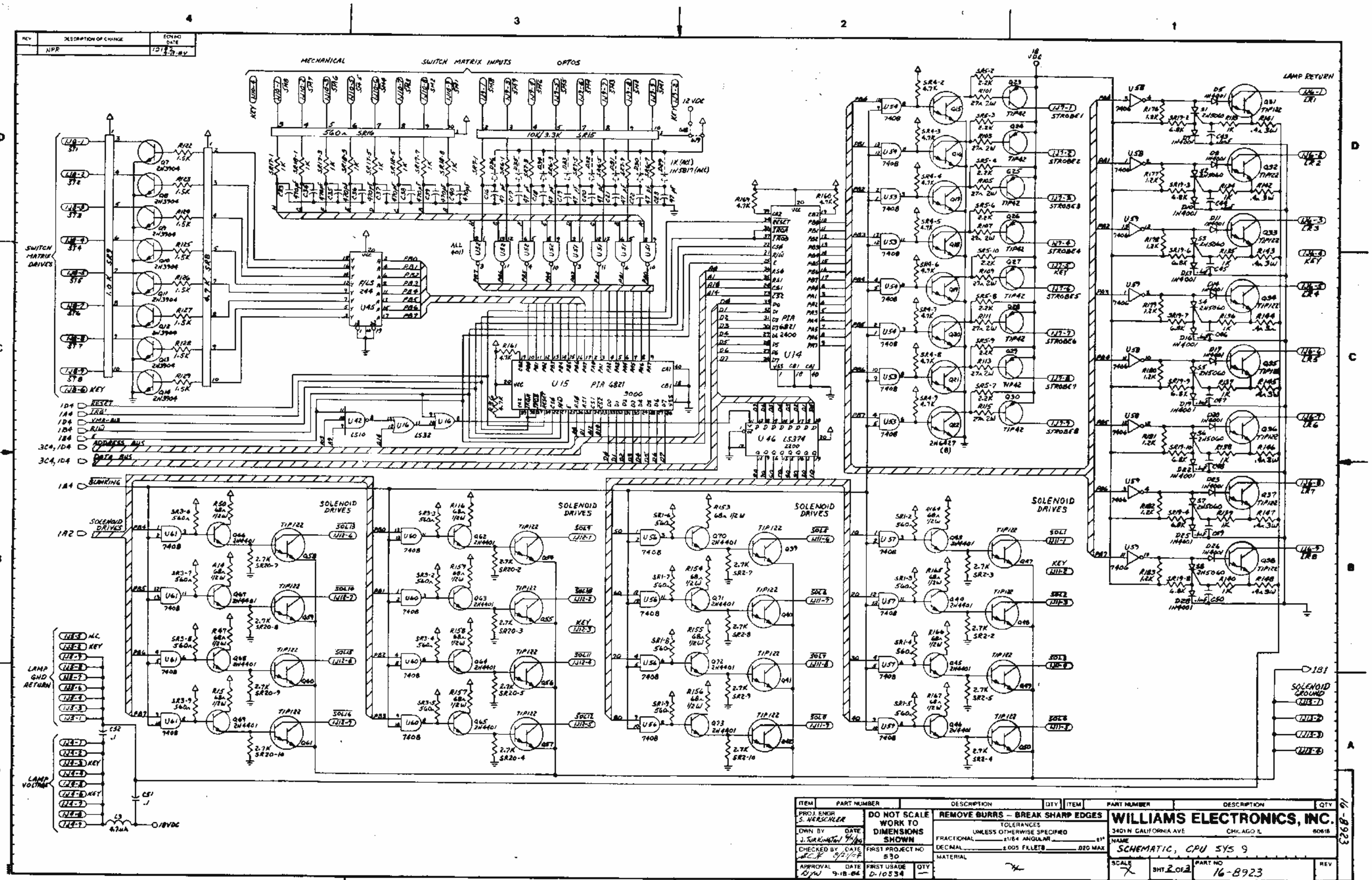

ITEM	PART NUMBER	DESCRIPTION	QTY	ITEM	PART NUMBER	DESCRIPTION	QTY

PROJ. ENGR S. HERSCHLER
DWN BY J. TURKINGTON 9/4/84
CHECKED BY 8/27/84
APPROVAL 9-18-84
DATE

DO NOT SCALE WORK TO DIMENSIONS SHOWN

FIRST PROJECT NO 530
FIRST USAGE D-10534
QTY —

REMOVE BURRS – BREAK SHARP EDGES

TOLERANCES UNLESS OTHERWISE SPECIFIED
FRACTIONAL ±1/64 ANGULAR ±1°
DECIMAL ±.005 FILLETS .020 MAX
MATERIAL

WILLIAMS ELECTRONICS, INC.
3401 N CALIFORNIA AVE CHICAGO IL 60618

NAME SCHEMATIC, CPU SYS 9
SCALE X SHT 2 OF 3 PART NO 16-8923 REV

16-8923

REV	DESCRIPTION OF CHANGE	ECN NO DATE
	NPR	13192 9-19-84

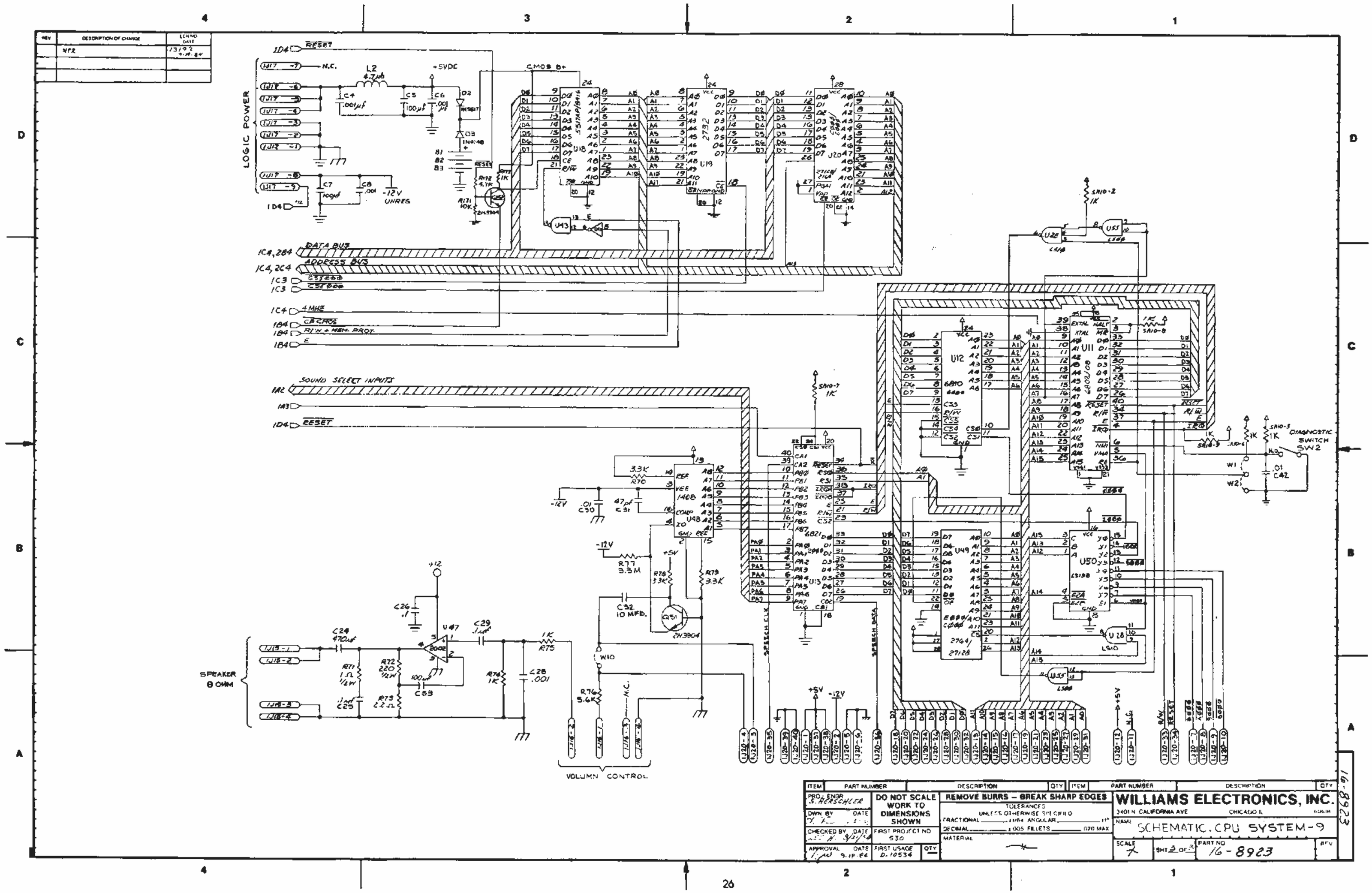

ITEM	PART NUMBER	DESCRIPTION	QTY	ITEM	PART NUMBER	DESCRIPTION	QTY

PROJ. ENGR. S. HORSCHLER
DWN BY DATE
CHECKED BY DATE 9/21/84
APPROVAL DATE 9-19-84

DO NOT SCALE WORK TO DIMENSIONS SHOWN

FIRST PROJECT NO 530
FIRST USAGE D-10534
QTY

REMOVE BURRS – BREAK SHARP EDGES
TOLERANCES UNLESS OTHERWISE SPECIFIED
FRACTIONAL ±1/64 ANGULAR ±1°
DECIMAL ±.005 FILLETS .020 MAX
MATERIAL

WILLIAMS ELECTRONICS, INC.
3401 N CALIFORNIA AVE CHICAGO IL 60618

NAME SCHEMATIC, CPU SYSTEM-9
SCALE 1/1 SHT 2 OF 3 PART NO 16-8923 REV

16-8923

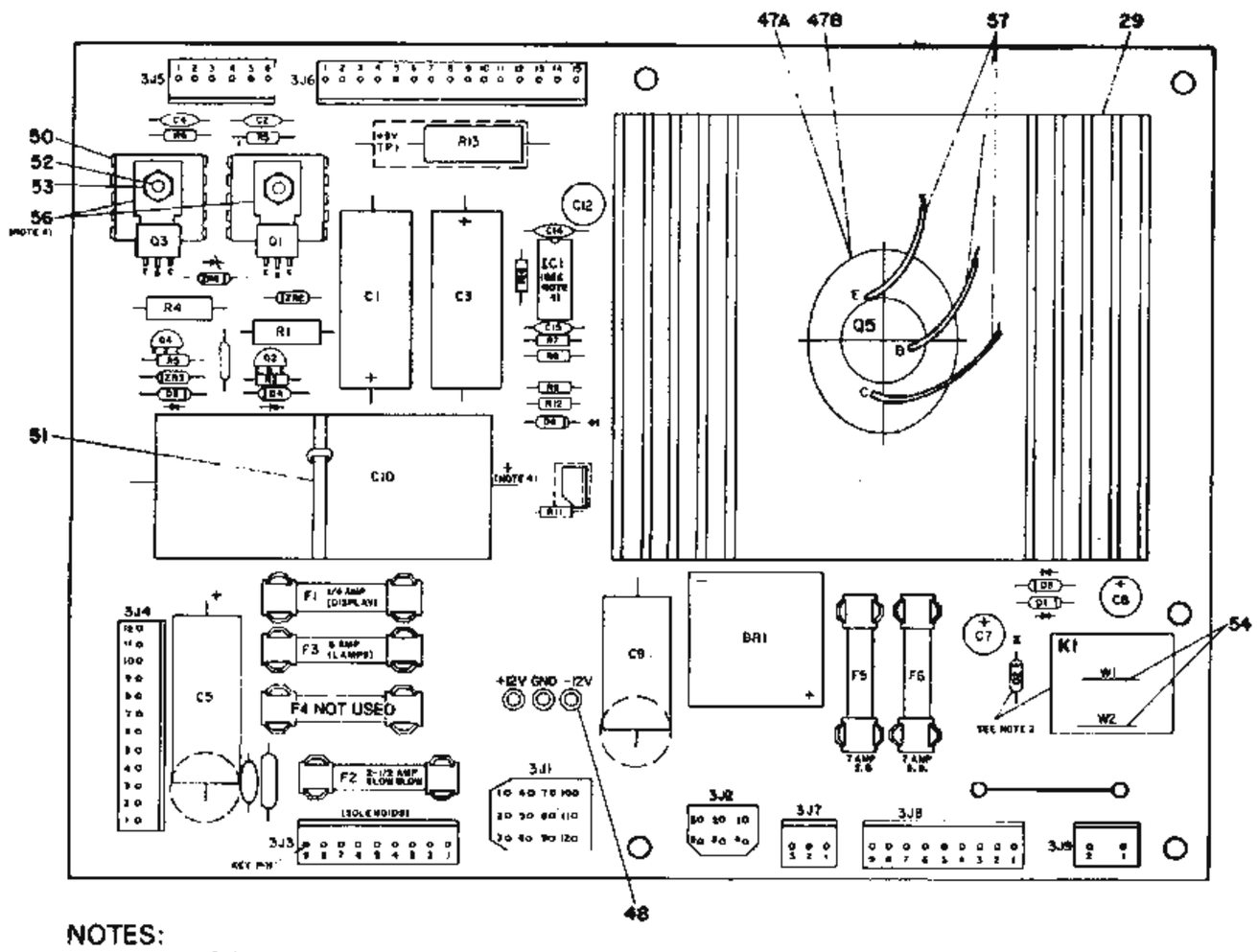

NOTES:

1. HEAT SINK COMPOUND MUST BE APPLIED BETWEEN TRANSISTOR AND HEAT SINK.
2. FOR BLACKOUT AND FUTURE GAME WITH SAME FEATURE REMOVE JUMPERS (W1 & W2)
   AND INSERT RELAY KI, DIODE, D2 AND 3J7.
3. OBSERVE INDEX MARK OF INEGRATED CIRCUIT, POLARITY OF CAPACITORS, DIODE AND POSITION OF TRANSISTORS.
4. REFERENCE DWG'S: SCHEMATIC 16-8786.

BILL OF MATERIAL

ITEM NO.	PART NO.	PART DESIGNATION	DESCRIPTION	REQ'D NO.
1	5763-09466		BARE P.C. BOARD	1
2	5013-09426	R7	RESISTOR, 2.15K, 1%, 1/4 W, METAL FILM	1
3	5013-09427	R8	RESISTOR, 4.99K, 1%, 1/4 W, METAL FILM	1
4	5010-09428	R11	RESISTOR, 1.5K, 2%, 1/4 W, CARBON FILM	1
5	5010-09085	R10	RESISTOR, 2.7K, 2%, 1/4 W	1
6	5010-09541	R9	RESISTOR, 2.7K, 2%, 1/4 W	1
7	5010-09508	R12	RESISTOR, 270 OHM, 2% 1/4 W, CARBON FILM	1
8	5012-09429	R13	POWER RESISTOR, 0.12 OHM, 5%, 5W	1
9	5010-09536	R1, R4	RESISTOR, 39K, 5%, 1 W	2
10	5010-09061	R2, R5	RESISTOR, 680 OHM, 2 W	2
11	5010-09069	R3, R6	RESISTOR, 330K, 5%, 1/2 W	2
12	5040-09419	C10	CAP.,ELECTROLYTIC, 18,000 MFD, 20V, AXIAL	1
13	5040-09420 5040-08893	C9	CAP.,ELECTROLYTIC 1,000 MFD 25V, RADIAL OR AXIAL	1
14	5040-09423	C12	CAP.,ELECTROLYTIC 330 MFD, 10V, RADIAL	1
15	5043-09065	C15	CAPACITOR, 470 pFD	1
16	5040-09053	C1, C3	CAPACITOR, 100 MFD,ELECT.,150V	2
17	5040-09070 5043-09537	C5	CAPACITOR, 100 MFD, ELECT., 100V, AXIAL OR RADIAL	1
18	5070-09446	C14	CAPACITOR, 0.1 MFD, 50V, CISC.	1
19	5070-06258	D1,D2,D3,D4,D5,D6	DIODE, IN4001	6
20	5075-09059	ZR1, ZR3	ZENER, IN5990, 3.9V, 5%	2
21	5075-09060	ZR2, ZR4	ZENER, IN4764, 100V, 5%	2
22	5060-09424	IC1	VOLTAGE REGULATOR, MC1723 PC	1
23	5043-09443	C2,C4,C6	CAPACITOR, 0.1 MFD, 200V, DISC	3
24	5040-09421	C7	CAPACITOR, 100 MFD, 25V, RADIAL	1
25	5164-09057	Q1	TRANSISTOR, SDS 201 NPN	1
26	5164-09056	Q4	TRANSISTOR, MPS 002 NPN	1
27	5194-09058	Q3	TRANSISTOR, SDS 202 PNP	1
28	5194-09055	Q2	TRANSISTOR, MPS 052 PNP	1
29	5705-04431		HEAT SINK	
30	5791-09067	3J5	CONNECTOR, 6 PIN (M)	1
31	5791-09074	3J6	CONNECTOR, 15 PIN (M)	1
32	5791-09027	3J8, 3J3	CONNECTOR, 9 PIN (M)	2
33	5791-09038	3J2	CONNECTOR, 6 PIN (M)	1
34	5162-09425	Q5	TRANSISTOR, POWER, 2N6087 NPN	
35	5791-09043	3J4	CONNECTOR, 12 PIN (M)	1
36	5791-09435	3J7	CONNECTOR, 3 PIN (M)	1
37	5791-09436	3J9	CONNECTOR, 2 PIN (M)	1
38	5791-09068	3J1	CONNECTOR, 12 PIN	1
39	5732-09178		FUSE HOLDER	14
40	5731-09128	F2	FUSE, 2-1/2 AMP, S.B.	1
41	5730-09071	F3	FUSE, 8 AMP	
42		F4	NOT USED	
43			NOT USED	
44	5731-08761	F1	FUSE, 20 AMP	1
45	5017-09061	VR1	VARISTOR	1
47A	5700-09445		SOCKET	
47B	5701-09538		MICA INSULATOR	
47	5580-09555	K1	RELAY, 24 VDC, 10 AMP, DPDT	1
48	5824-09248		TERMINAL, #1502-1 (TEST POST)	3
49	5100-09418	BR-1	BRIDGE RECTIFIER, 35 AMP, 100V	1
50	5705-09042		HEAT SINK	2
51	3A-7520-1		TIE WRAP	1
52	4005-01016-07		5-40 x 7/16 R.H. MECH. SCREW	2
53	4405-01117		5-40 HEX NUT	2
54		W1, W2	JUMPER, #18 AWG	2
55	5040-09422	C8	CAPACITOR, 47 MFD, 50V, RADIAL	1
56	20-9229		THERMAL COMPOUND	
57			LEAD WIRE, #18 AWG (3")	3
58	5731-09432	F6, F5	FUSE, 7A, S.B., 250V	2

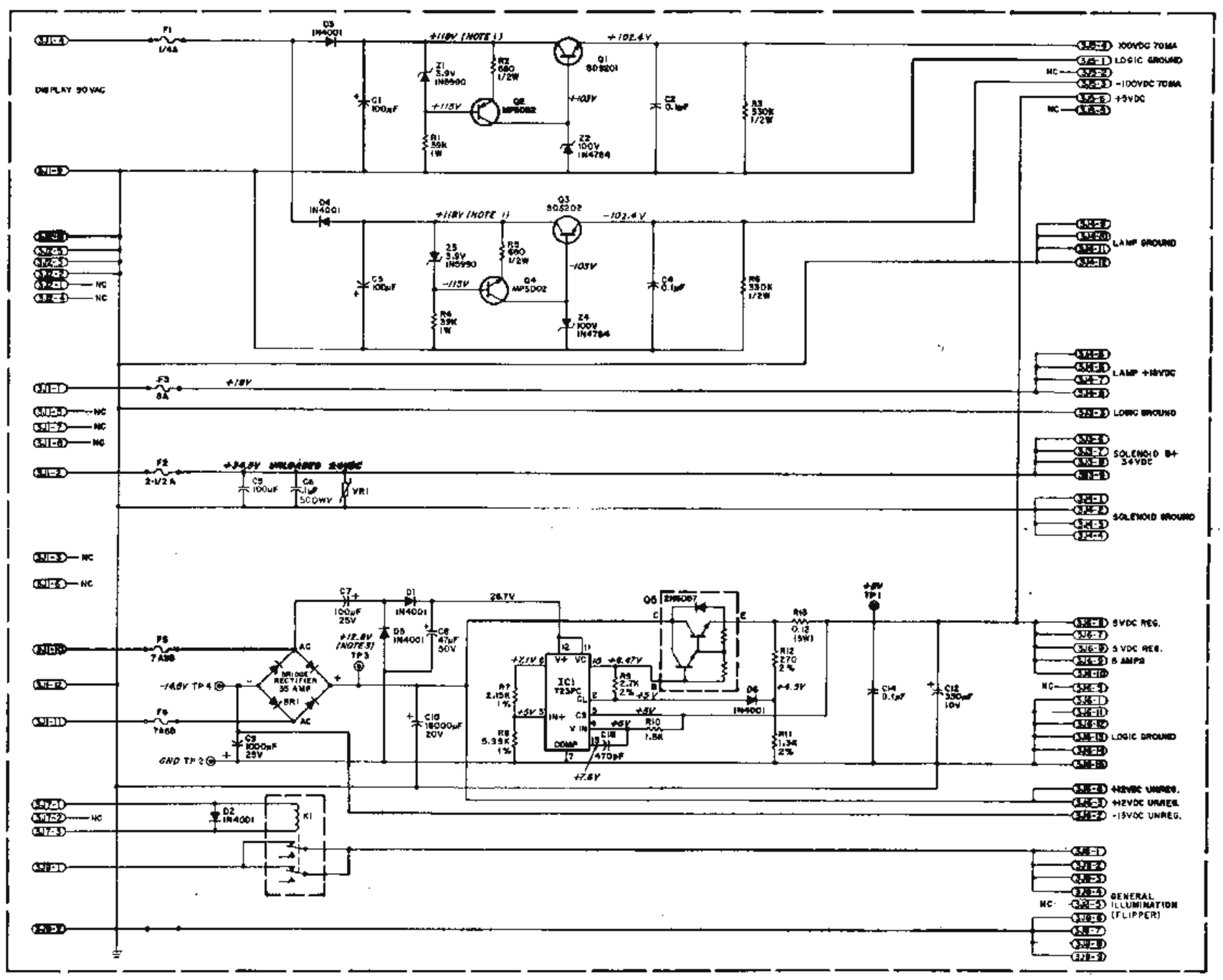

1. DISPLAY VOLTAGE MEASURED WITH DIGITS DISPLAY TEST ON & DISPLAYS AT ALL ZEROS.
2. UNLESS OTHERWISE INDICATED ALL RESISTORS ARE IN OHMS (Ω) 1/4 WATT.
3. TP3, UNREG. +12VDC TYPICAL READOUT NOT TO GO LOWER THAN +10.5V OR INTERMITTENT RESET WILL OCCUR.

BILL OF MATERIAL				
ITEM	PART NO.	PART DESIGNATION	DESCRIPTION	REQ'D.
1	[illegible]		SLAVE DISPLAY P.C. BOARD	1
2	[illegible]		DISPLAY MTG ADHESIVE FOAM	1
3	[illegible]		7 DIGIT DISPLAY	1
4	[illegible]	J1	20 PIN RIBBON HEADER	1
5	03-7573-2		CAPLUG	1

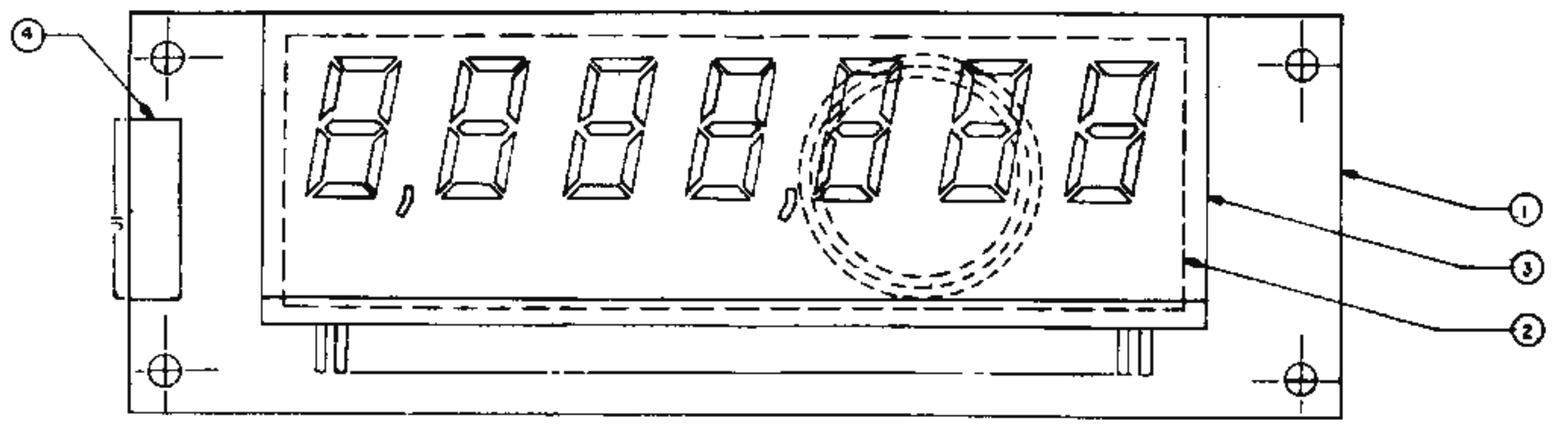

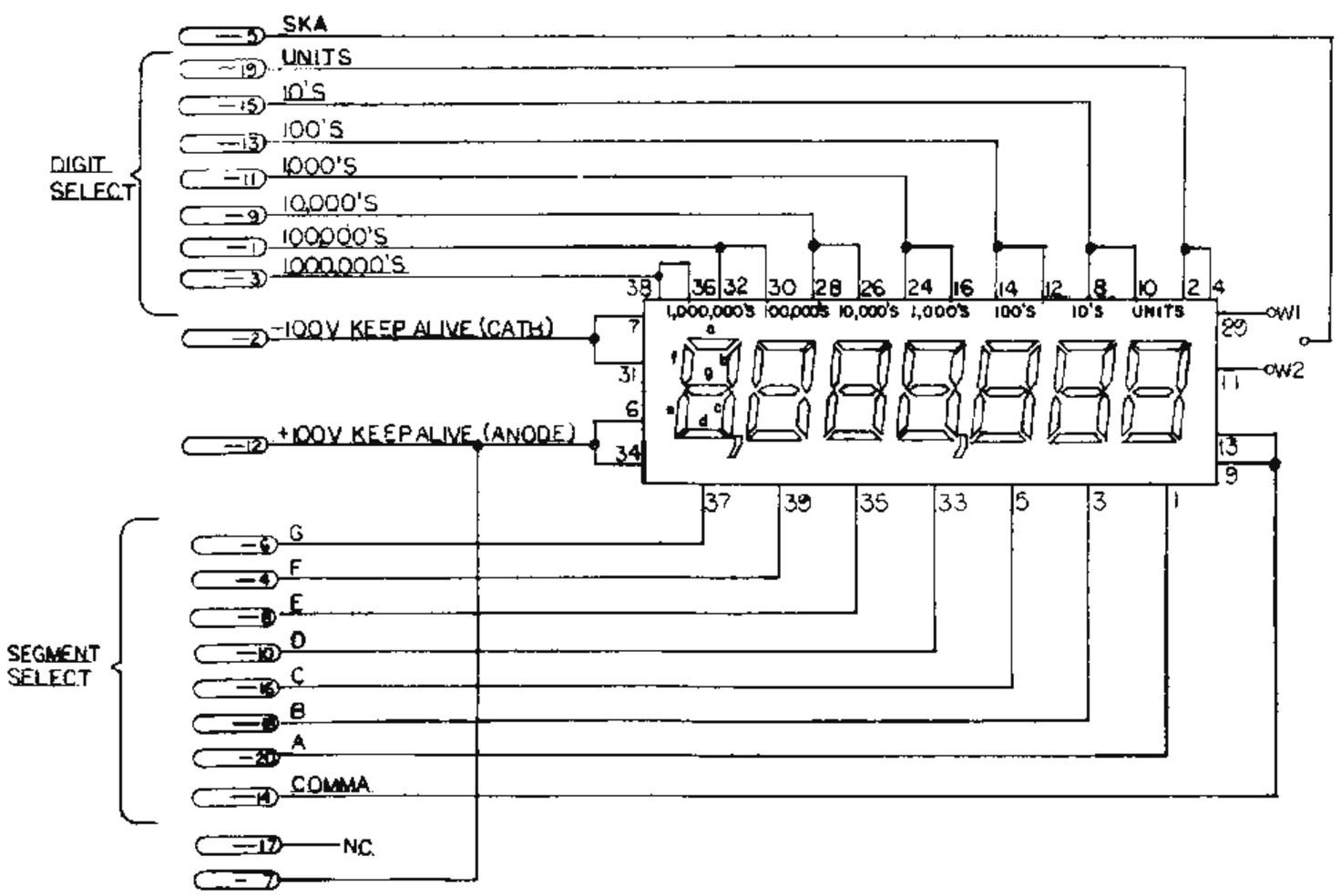

C 8364 PLAYER SLAVE DISPLAY

BILL OF MATERIAL				
ITEM	PART NO.	PART DESIGNATION	DESCRIPTION	REQ'D
1	[illegible]		CREDIT/MATCH SLAVE P.C. BOARD	1
2	23-[illegible]		FOAM DISPLAY - BACK	1
3	[illegible]		4 DIGIT DISPLAY	1
4	[illegible]	J1	20 PIN RIBBON HEADER	1
5	23-6546		FOAM DISPLAY - FRONT	1
6	03-7573-2		CAPLUG	1

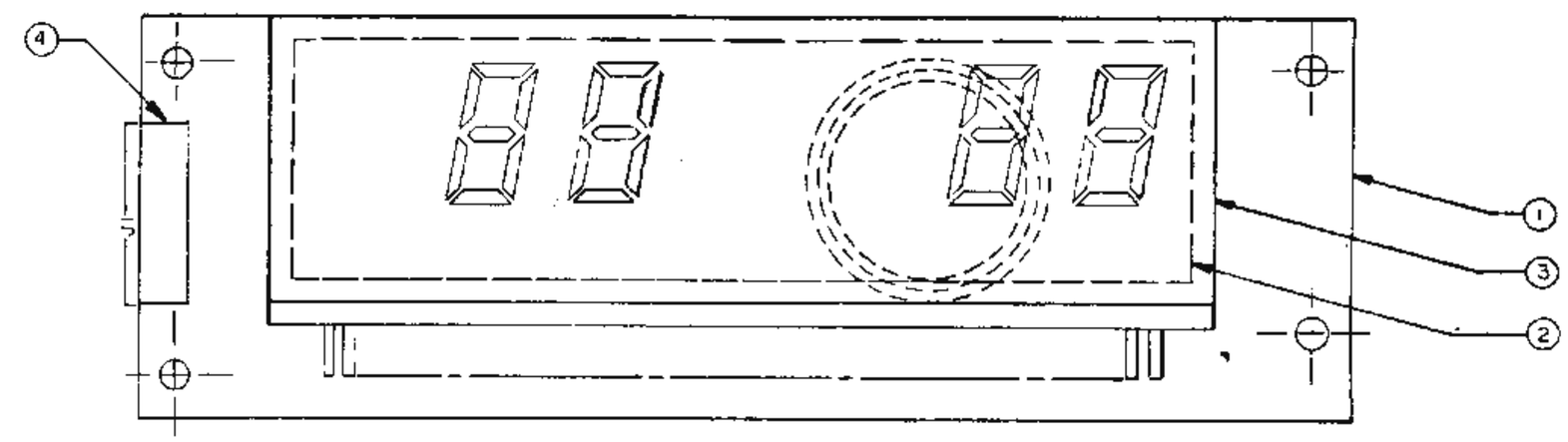

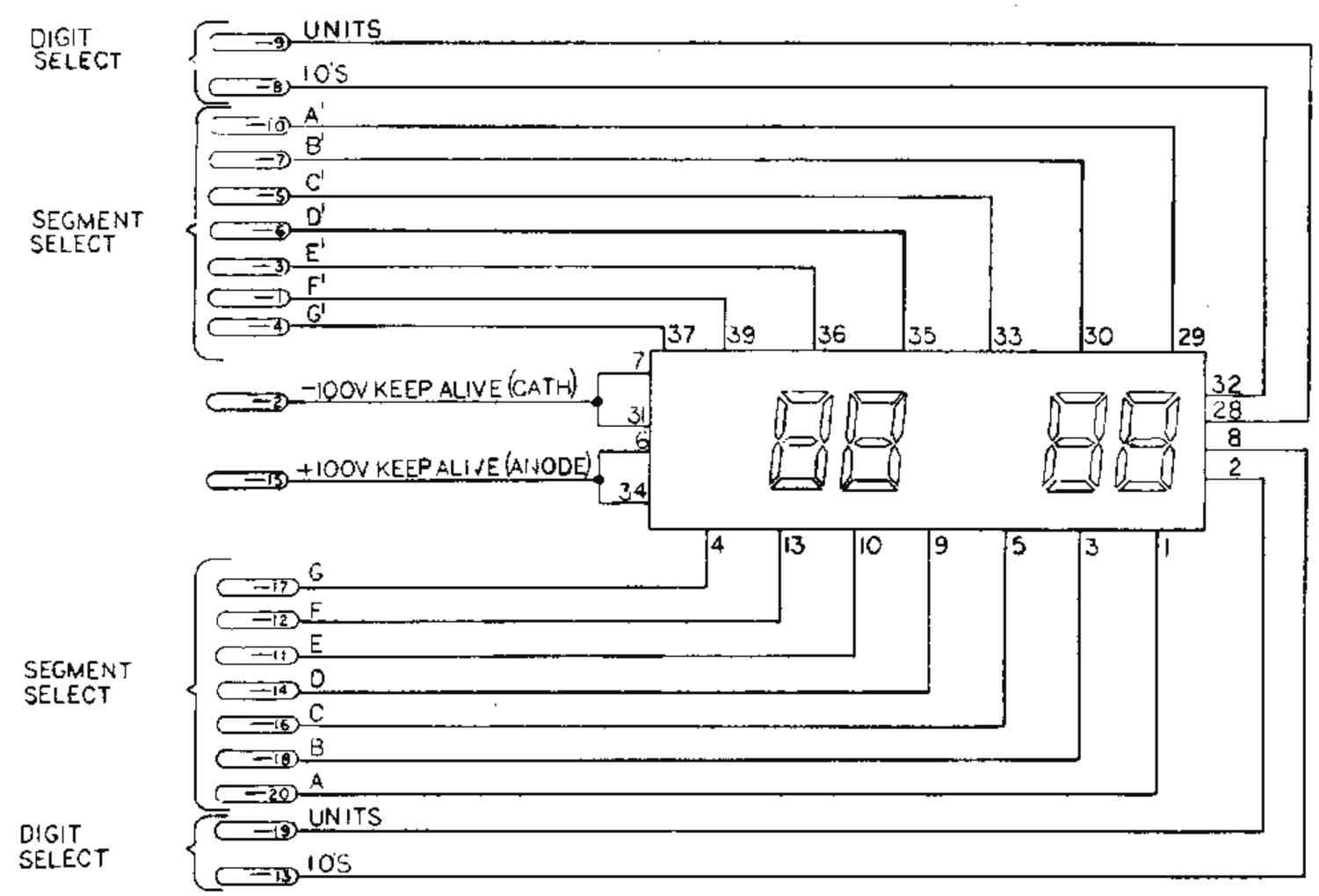

C 8365 CREDIT/MATCH SLAVE DISPLAY

PLAYERS #1 AND 3

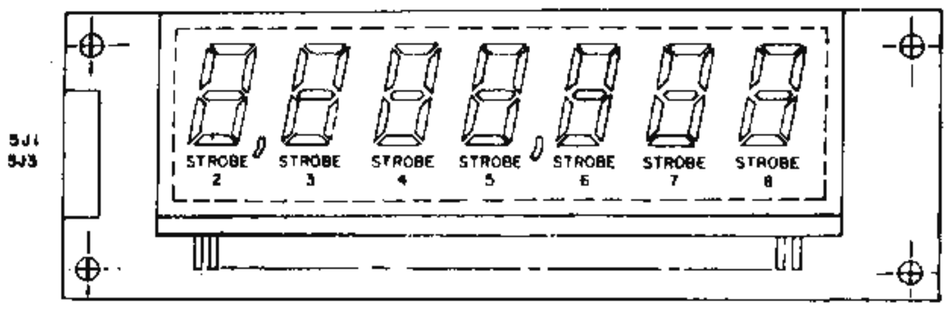

PLAYERS #2 AND 4

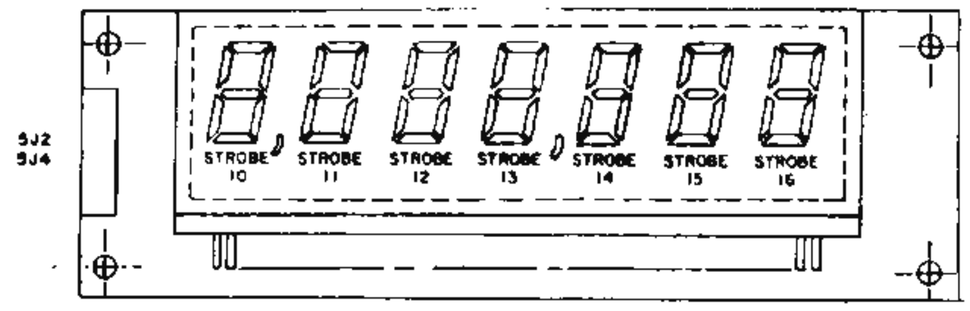

DETAIL A

4J1 – 4J4, 4J8
5J1 – 5J5
CONNECTORS

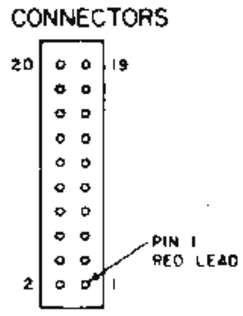

4J1/5J1 (PLAYER 1)

1	100,000's
2	-100V KEEP ALIVE
3	1,000,000's
4	f SEGMENT
5	N/C
6	g SEGMENT
7	+100V (N/C)
8	e SEGMENT
9	10,000's
10	d SEGMENT
11	1,000's
12	+100V KEEP ALIVE
13	100's
14	COMMA
15	10's
16	c SEGMENT
17	N/C
18	b SEGMENT
19	UNITS
20	a SEGMENT

4J2/5J2 (PLAYER 2)

1	100,000's
2	-100V KEEP ALIVE
3	1,000,000's
4	f' SEGMENT
5	N/C
6	g' SEGMENT
7	+100V (N/C)
8	e' SEGMENT
9	10,000's
10	d' SEGMENT
11	1,000's
12	+100V KEEP ALIVE
13	100's
14	COMMA
15	10's
16	c' SEGMENT
17	N/C
18	b' SEGMENT
19	UNITS
20	a' SEGMENT

4J8/5J5 (CREDIT/MATCH)

1	f' Segment (Credit)	
2	-100V Keep Alive	
3	e' Segment	Credit
4	g' Segment	Credit
5	c' Segment	Credit
6	d' Segment	Credit
7	b' Segment	Credit
8	10's	Credit
9	Units	Credit
10	a' Segment	Credit
11	e Segment	Match
12	f Segment	Match
13	10's	Match
14	d Segment	Match
15	+100V Keep Alive	
16	c Segment	Match
17	g Segment	Match
18	b Segment	Match
19	Units	Match
20	a Segment	Match

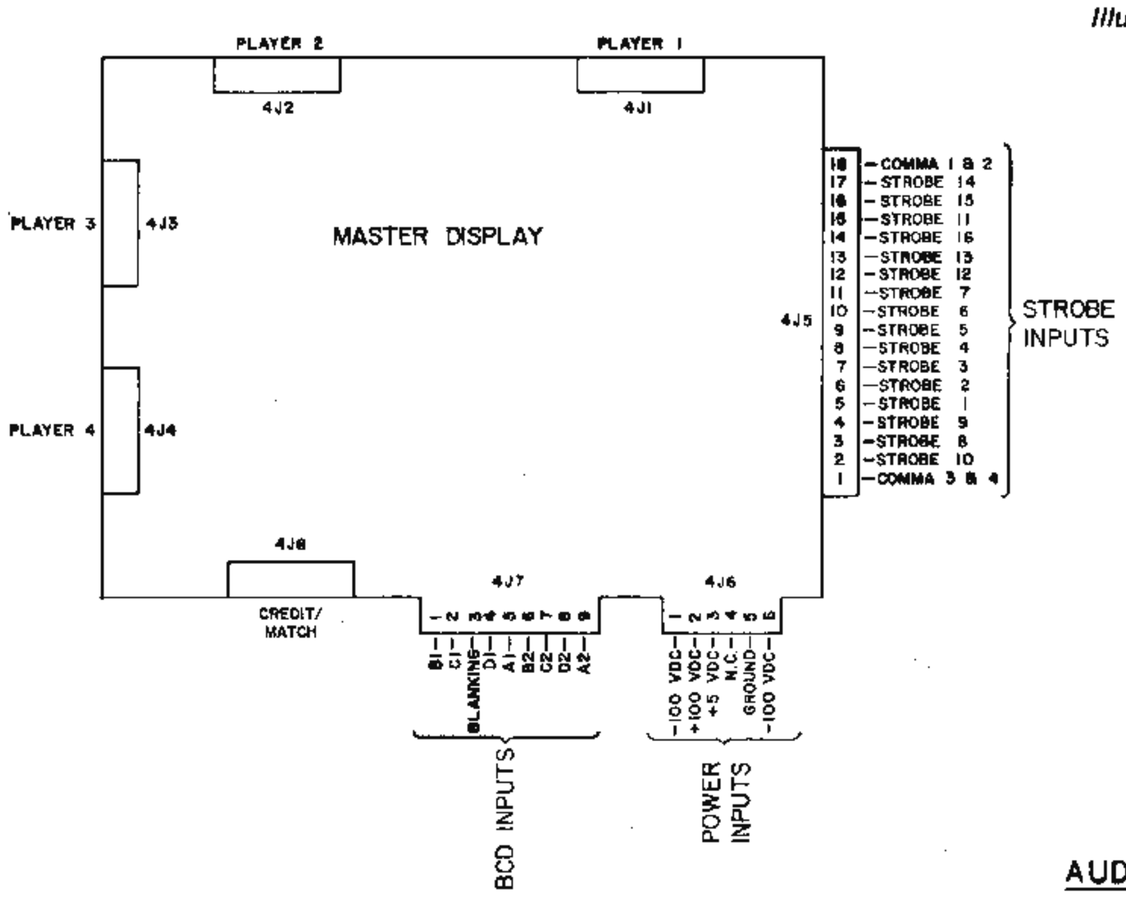

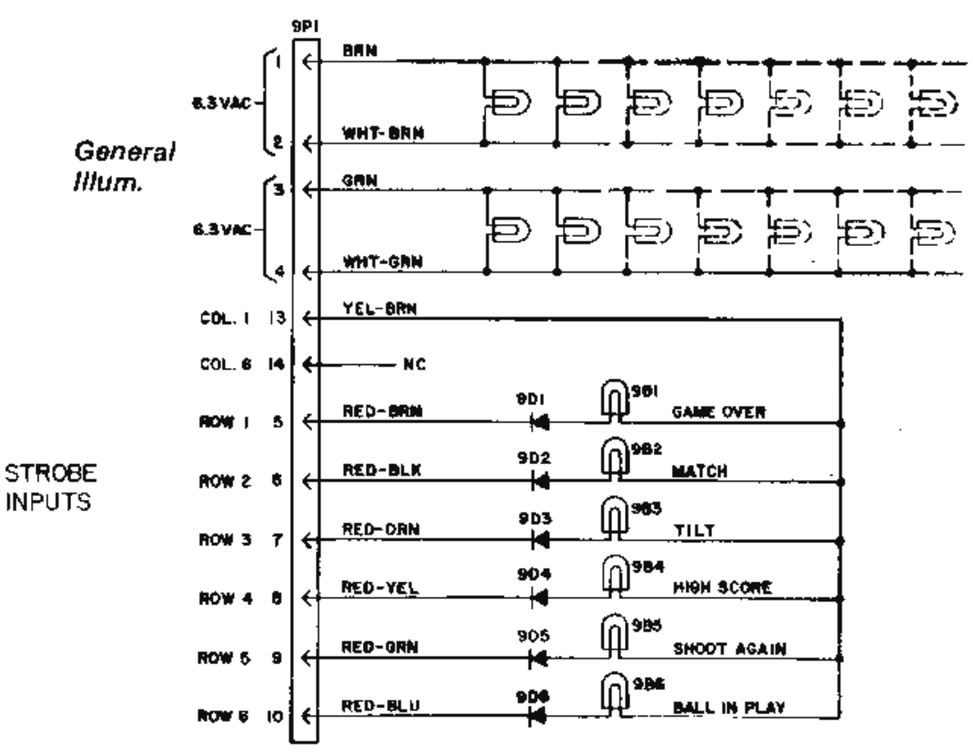

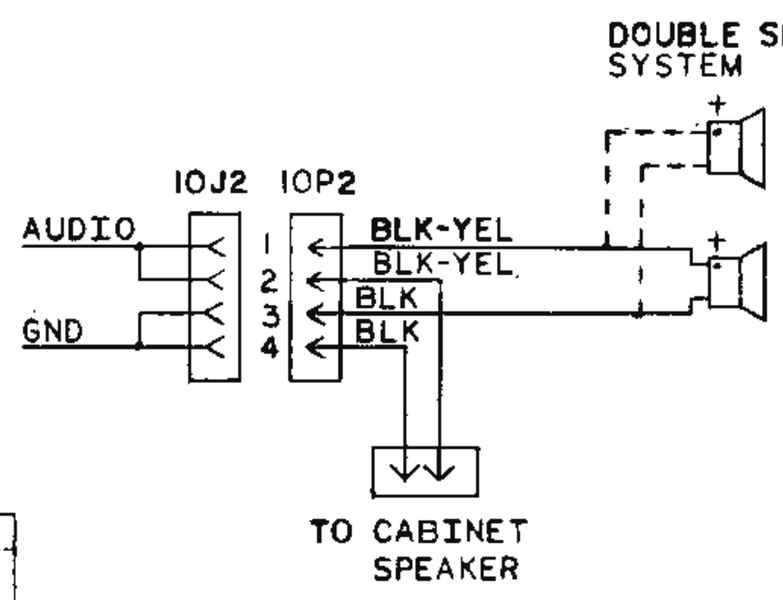

CREDITS / BALL IN PLAY

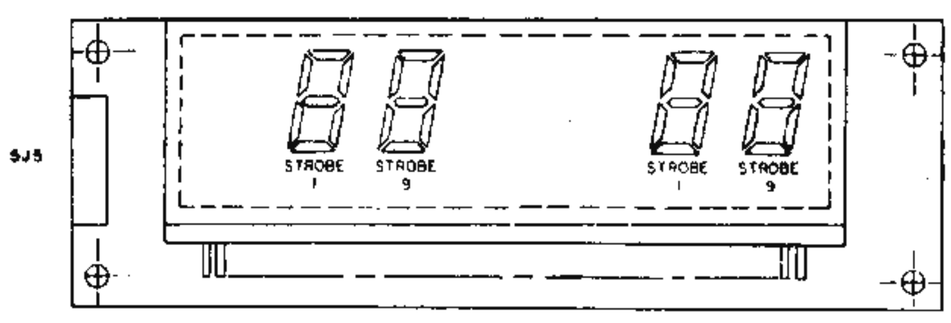

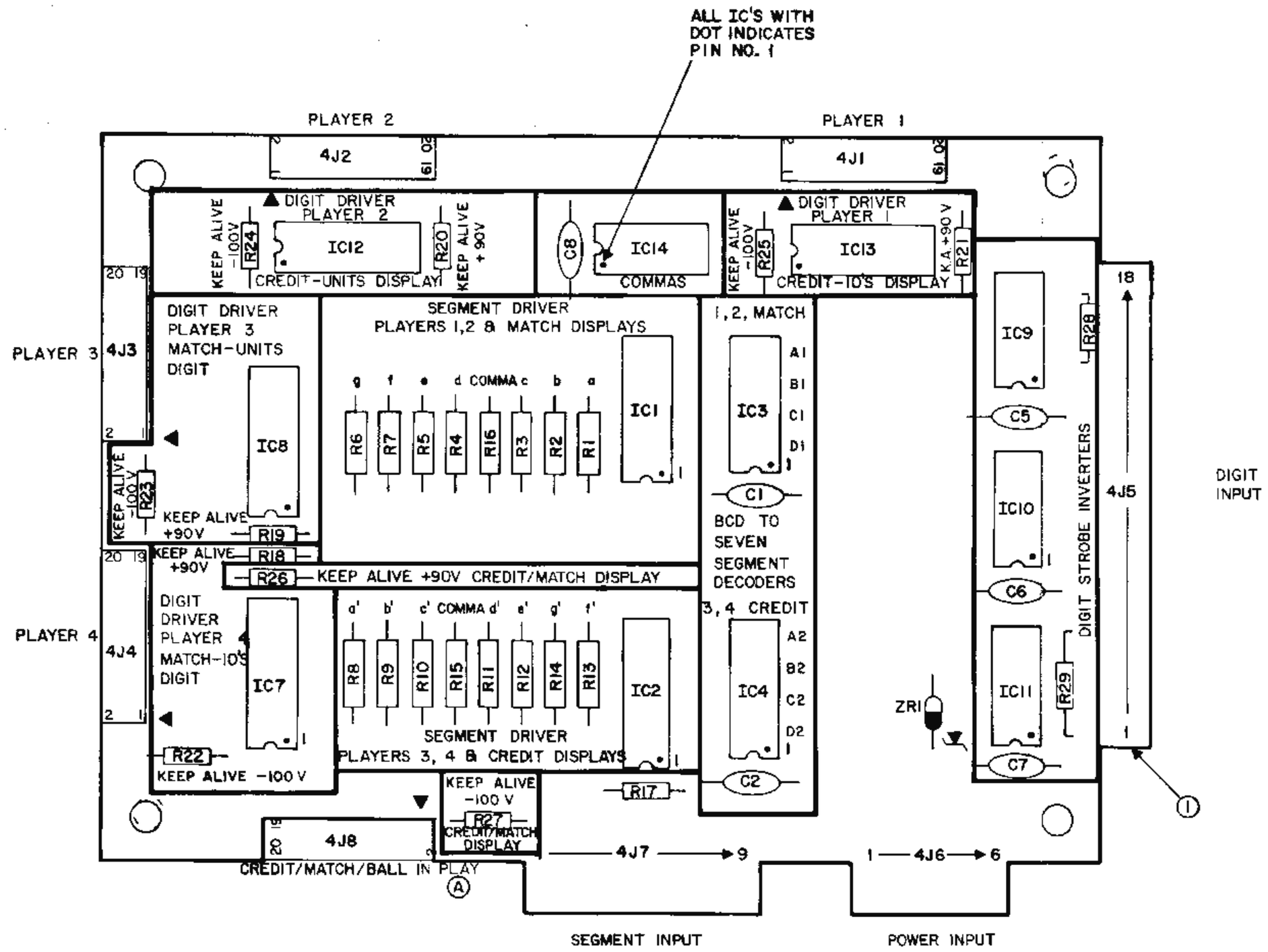

BILL OF MATERIAL

ITEM NO.	PART NO.	PART DESIGNATION	DESCRIPTION	REQ'D NO.
1	5760-09461		BARE P.C. BOARD	1
2	5310-08971	IC9,IC10,IC11	MC14069 HEX INVERTER	3
3	5310-08970	IC3, IC4	MC14543 BCD TO SEVEN SEGMENT LATCH/DECODER/DRIVER	2
4	5680-08969	IC1, IC2	UDN-7180 GAS DISCHARGE DISPLAY SEGMENT DRIVER	2
5	5680-08968	IC7,IC8,IC12,IC13	UDN-6184A OR UDN-6118A GAS DISCHARGE DISPLAY SEGMENT DR.	4
6	5310-09450	IC14	MC14081 QUAD 2-INPUT AND GATE	1
7	5010-08981	R1-R14	RESISTOR,FC,10K OHM, 5%, 1/2 WATT	14
8	5075-09135	ZR1	IN4740A ZENER DIODE 10V, 5%, 1 WATT	1
9	5043-08980	C1,C2 C5 THRU C8	CAPACITOR, CERAMIC, 0.01 MFD., 50V, +80 -20%	6
10	5010-09035	R28, R29	RESISTOR, FC,47K OHM, 5%, 1/4 WATT	2
11	5010-09086	R17	RESISTOR, FC, 6.8K OHM, 5%, 1/4 WATT	1
12	5010-08982	R18 THRU R27	RESISTOR, FC, 3 MEG. OHM, 5%, 1/4 WATT	10
13	5791-09437	J1 THRU J4, J8	20 PIN RIBBON HEADER	5
14	5010-09149	R15, R16	RESISTOR, FC, 15K OHM, 5%, 1/2 WATT	2
15	5010-09534	W1, W3	RESISTOR, 0 OHM	2

DIGIT CROSS REFERENCE

DIGIT	7-SEGMENT DECODER/DRIVER	STROBE (DRIVER)
Credit 10's	IC4/IC2	1 (IC13)
Credit Units	IC4/IC2	9 (IC12)
Match 10's	IC3/IC1	1 (IC7)
Match Units	IC3/IC1	9 (IC8)
#1 1,000,000	IC3/IC1	2 (IC13)
#1 100,000's	IC3/IC1	3 (IC13)
#1 10,000's	IC3/IC1	4 (IC13)
#1 1,000's	IC3/IC1	5 (IC13)
#1 100's	IC3/IC1	6 (IC13)
#1 10's	IC3/IC1	7 (IC13)
#1 Units	IC3/IC1	8 (IC13)
#2 1,000,000's	IC3/IC1	10 (IC12)
#2 100,000's	IC3/IC1	11 (IC12)
#2 10,000's	IC3/IC1	12 (IC12)
#2 1,000's	IC3/IC1	13 (IC12)
#2 100's	IC3/IC1	14 (IC12)
#2 10's	IC3/IC1	15 (IC12)
#2 Units	IC3/IC1	16 (IC12)
#3 1,000,000's	IC4/IC2	2 (IC8)
#3 100,000's	IC4/IC2	3 (IC8)
#3 10,000's	IC4/IC2	4 (IC8)
#3 1,000's	IC4/IC2	5 (IC8)
#3 100's	IC4/IC2	6 (IC8)
#3 10's	IC4/IC2	7 (IC8)
#3 Units	IC4/IC2	8 (IC8)
#4 1,000,000's	IC4/IC2	10 (IC7)
#4 100,000's	IC4/IC2	11 (IC7)
#4 10,000's	IC4/IC2	12 (IC7)
#4 1,000's	IC4/IC2	13 (IC7)
#4 100's	IC4/IC2	14 (IC7)
#4 10's	IC4/IC2	15 (IC7)
#4 Units	IC4/IC2	16 (IC7)
#1 Comma	-/IC1	2,5 (IC13)
#2 Comma	-/IC2	10,13 (IC12)
#3 Comma	-/IC1	2,5 (IC8)
#4 Comma	-/IC2	10,13 (IC7)

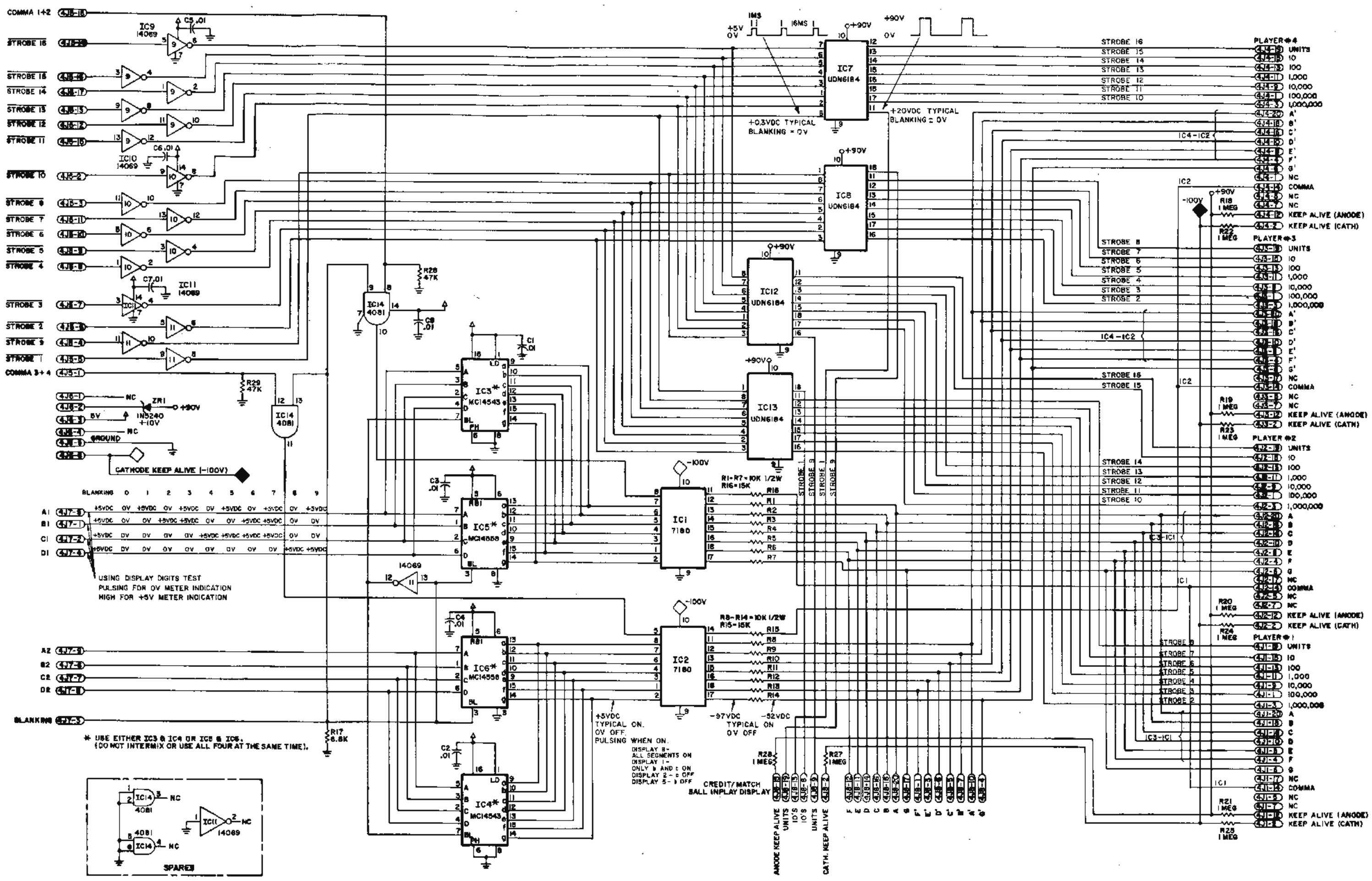
COMMA 1+2
STROBE 16
STROBE 15
STROBE 14
STROBE 13
STROBE 12
STROBE 11
STROBE 10
STROBE 9
STROBE 8
STROBE 7
STROBE 6
STROBE 5
STROBE 4
STROBE 3
STROBE 2
STROBE 1
COMMA 3+4
IC9 14069
IC10 14069
IC11 14069
IC14 4081
IC14 4011
ZR1 1N5240 +10V
CATHODE KEEP ALIVE (-100V)
BLANKING
USING DISPLAY DIGITS TEST
PULSING FOR 0V METER INDICATION
HIGH FOR +5V METER INDICATION
IC3* MC14543
IC5* MC14558
IC6* MC14558
IC4* MC14543
IC7 UDN6184
IC8 UDN6184
IC12 UDN6184
IC13 UDN6184
IC1 7180
IC2 7180
+0.3VDC TYPICAL BLANKING = 0V
+20VDC TYPICAL BLANKING = 0V
R1-R7 = 10K 1/2W
R16=15K
R8-R14 = 10K 1/2W
R15=15K
+5VDC TYPICAL ON. 0V OFF. PULSING WHEN ON.
-97VDC TYPICAL ON 0V OFF
-52VDC
DISPLAY 8- ALL SEGMENTS ON
DISPLAY 1- ONLY b AND c ON
DISPLAY 2- b OFF
DISPLAY 5- b OFF
CREDIT/MATCH
BALL IN PLAY DISPLAY
ANODE KEEP ALIVE
UNITS
10'S
100'S
UNITS
CATH. KEEP ALIVE
PLAYER #4
PLAYER #3
PLAYER #2
PLAYER #1
UNITS
10
100
1,000
10,000
100,000
1,000,000
A'
B'
C'
D'
E'
F'
G'
NC
COMMA
KEEP ALIVE (ANODE)
KEEP ALIVE (CATH)
A
B
C
D
E
F
G
IC4-IC2
IC3-IC1
R17 6.8K
R18 1 MEG
R19 1 MEG
R20 1 MEG
R21 1 MEG
R22 1 MEG
R23 1 MEG
R24 1 MEG
R25 1 MEG
R26 1 MEG
R27 1 MEG
R28 47K
R29 47K
C1 .01
C2 .01
C3 .01
C4 .01
C5 .01
C6 .01
C7 .01
C8 .01
* USE EITHER IC3 & IC4 OR IC5 & IC6.
(DO NOT INTERMIX OR USE ALL FOUR AT THE SAME TIME).
SPARES

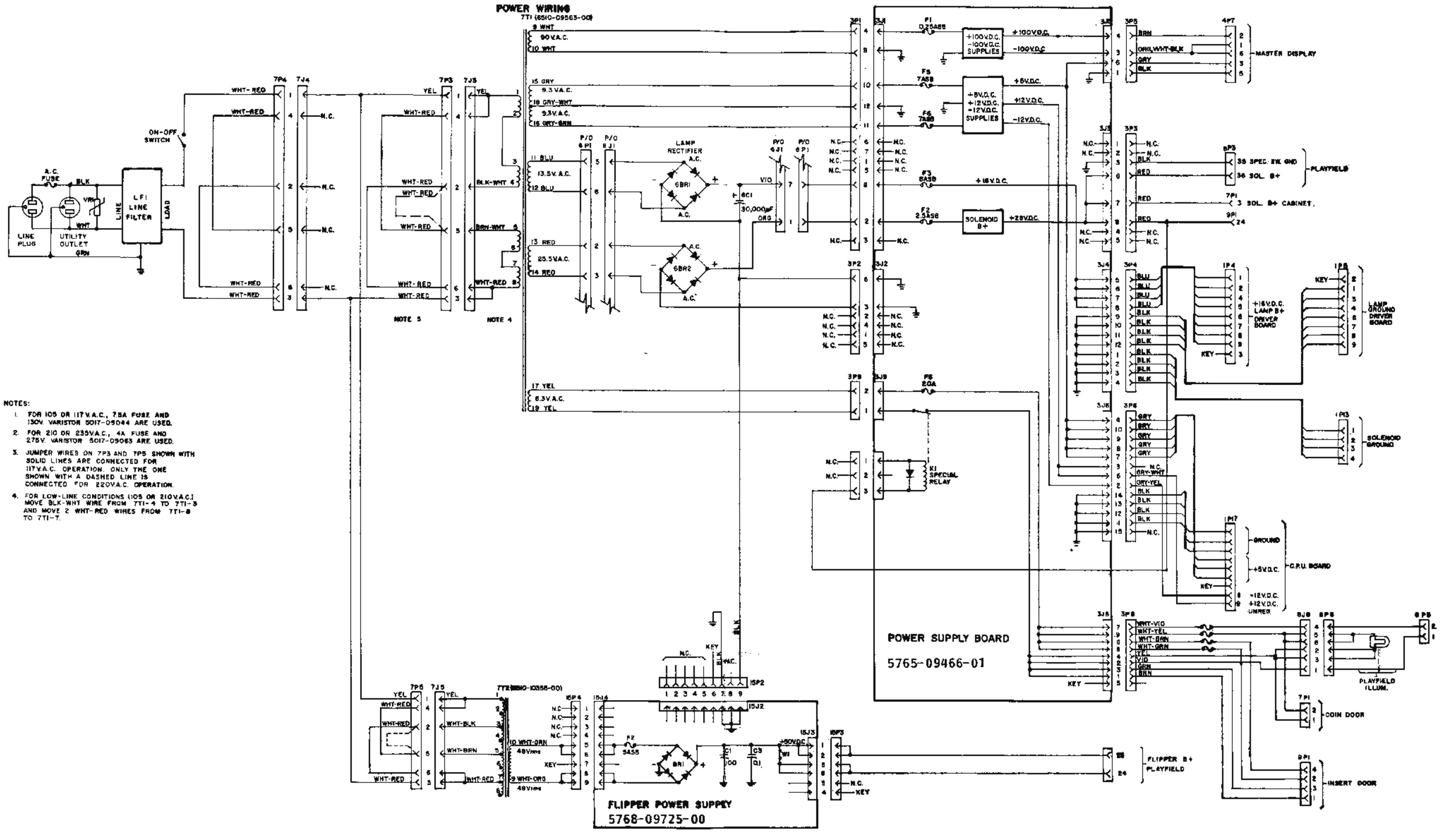

NOTES:

1. FOR 105 OR 117V.A.C., 7.5A FUSE AND 130V. VARISTOR 5017-09044 ARE USED.
2. FOR 210 OR 235V.A.C., 4A. FUSE AND 275V. VARISTOR 5017-09063 ARE USED.
3. JUMPER WIRES ON 7P3 AND 7P5 SHOWN WITH SOLID LINES ARE CONNECTED FOR 117V.A.C. OPERATION. ONLY THE ONE SHOWN WITH A DASHED LINE IS CONNECTED FOR 220V.A.C. OPERATION.
4. FOR LOW-LINE CONDITIONS (105 OR 210V.A.C.) MOVE BLK-WHT WIRE FROM 7T1-4 TO 7T1-3 AND MOVE 2 WHT-RED WIRES FROM 7T1-8 TO 7T1-7.