GAME 1178-E
FO 653

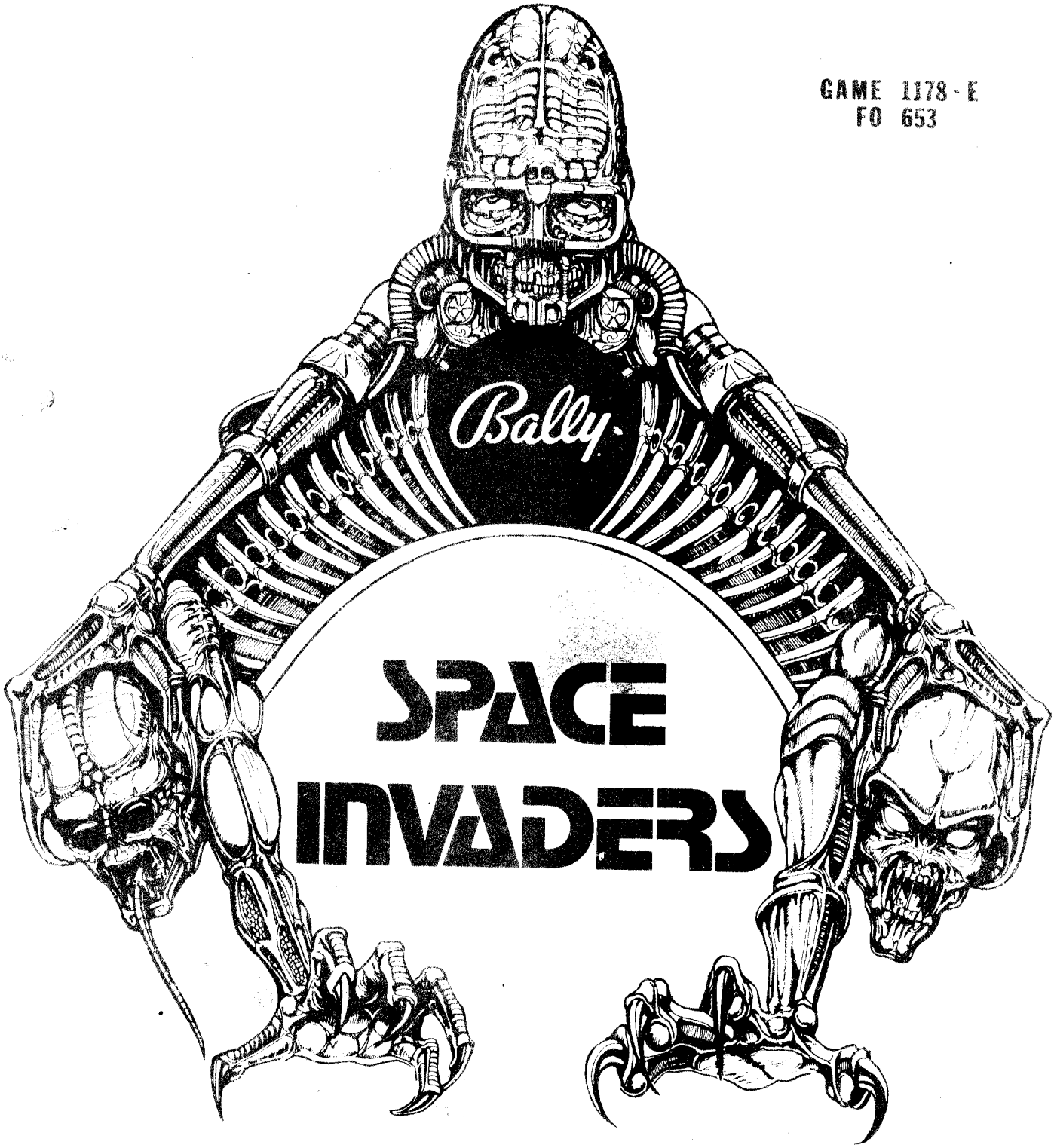

Bally

© BALLY MFG. CORP. 1980
ALL RIGHTS RESERVED

PINBALL DIVISION

9700 O'Leary Drive, Bensenville, Illinois 60106, U.S.A.
Telephone: (312) 860-6400

GAME #1178 SPACE INVADERS

Installation and General Game Operation Instructions

INDEX

		PAGE
I.	INSTALLATION	1
II.	GENERAL GAME OPERATION	2
III.	BOOKKEEPING FUNCTIONS	3
IV.	FEATURE OPERATION AND SCORING	4
V.	GAME ADJUSTMENTS	5
	A. PLAYFIELD ADJUSTMENTS	5
	B. BACKBOX ADJUSTMENTS	5
	CREDITS/COIN	5
	MAXIMUM CREDITS	6
	BALLS/GAME	6
	MATCH FEATURE OPTION	6
	CREDIT DISPLAY	6
	HIGH SCORE FEATURE OPTION	6
	HIGH SCORE TO DATE	6
	GAME FEATURE OPTIONS	7
	SOUND OPTION	7
	C. FRONT DOOR GAME ADJUSTMENTS	
	HIGH SCORE FEATURE	8
	HIGH SCORE TO DATE FEATURE	8
VI.	RECOMMENDED SCORE CARDS	11
VII.	RECOMMENDED SETTINGS	12
VIII.	ROUTINE MAINTENANCE ON LOCATION	13
IX.	TROUBLE SHOOTING ON LOCATION	13
X.	SERVICE/PARTS	19
XI.	PARTS LIST	20-31

BLOCK DIAGRAM—ELECTRONIC PINBALL GAME

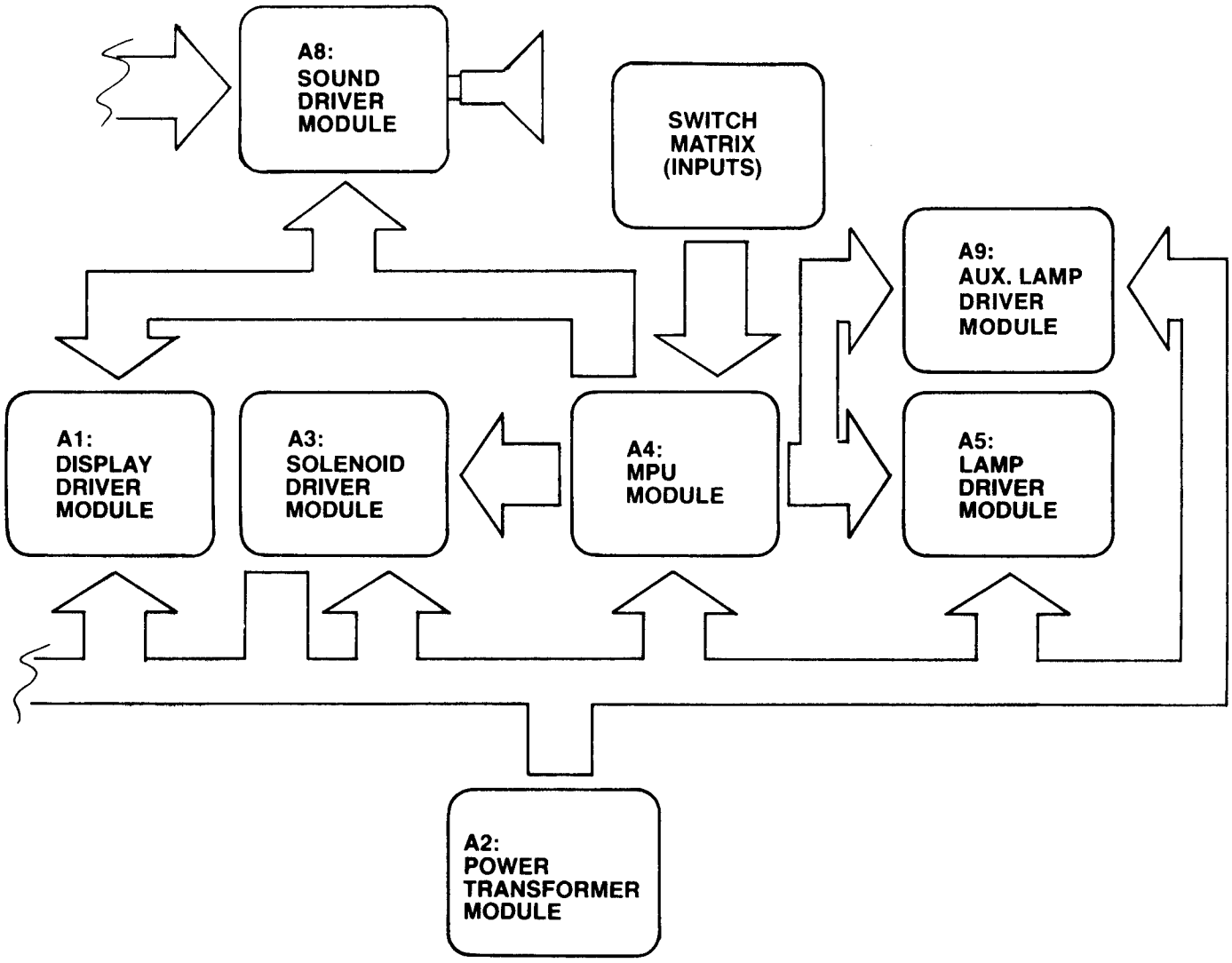

I. INSTALLATION

Assemble the game as follows:

Bolt legs to cabinet. Bolt back box to cabinet. Use flat washers under bolt heads. Gently feed cable connectors and ground braid through cable port in back box. Screw ground braid to braid in back box. Carefully and fully insert connectors on printed circuit assemblies.

On all games there are certain items that should be checked after shipment. These are visual inspections which may avoid time consuming service work later. Minor troubles caused by abusive handling in shipment are unavoidable. Cable connectors may be loosened, switches (especially tilt switches) may go out of adjustment. Plumb bob tilt switch should always be adjusted after game is set on location and leg levelers are adjusted.

Visual inspections before plugging in line cord:

1. Check that all cable connectors are completely seated on printed circuit assemblies.
2. Check that cables are clear of all moving parts.
3. Check for any wires that may have become disconnected.
4. Check switches for loose solder or other foreign material that may have come loose in shipment and could cause shorting of contacts.
5. Check wires on coils for proper soldering. Cold solder connections may not show up in factory inspection, but vibration in shipment may break contact.
6. Check that fuses are firmly seated and making good contact.
7. Check the transformer for any foreign material shorting across wiring lugs.
8. Check wiring of transformer to correspond to location voltage. See figure 1.

Check adjustment of the three (normally open) tilt switches:

1. Panel tilt on bottom of playfield panel.
2. Plumb bob tilt on left side of cabinet near front door.
3. Ball tilt above plumb bob tilt. Insert the smaller ball (15/16" dia.) into the ball tilt assembly, and adjust the bracket so the ball will roll free to contact the switch blade, if front of cabinet is raised.

TRANSFORMER CONNECTION INSTRUCTIONS

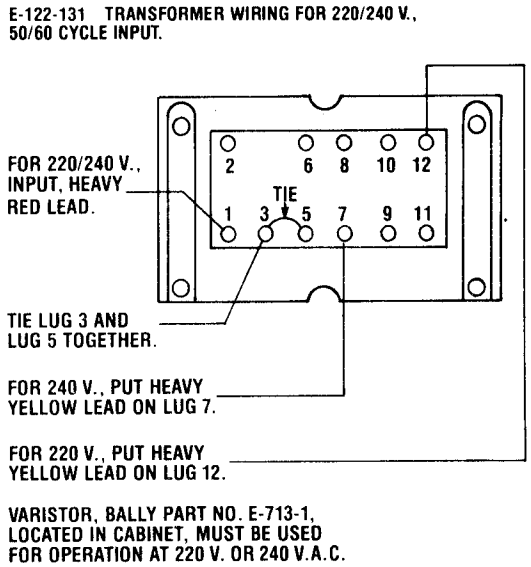

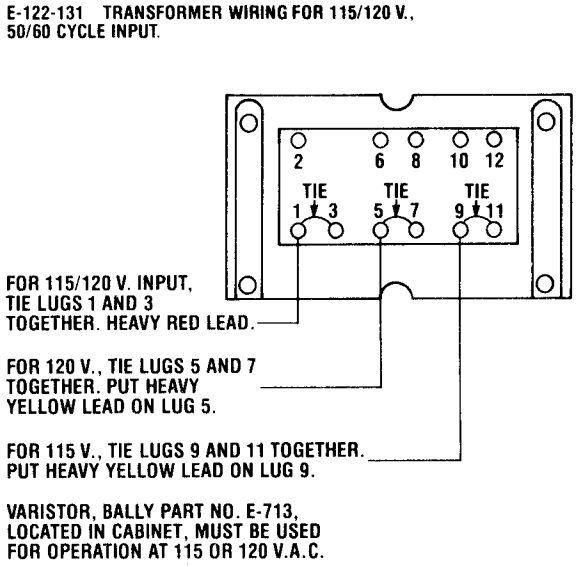

FIGURE I. TRANSFORMER
(PART OF POWER—TRANSFORMER MODULE A2, LOCATED IN BACK BOX).

II. GENERAL GAME OPERATION

Place ball into playfield by outhole.

Coin game. Coin should be rejected. Plug in line cord. Move power ON-OFF master switch at bottom right front corner of cabinet to 'ON' position. The game will play a power-up tune to announce game-readiness. Drop targets are reset, scores are set to zero, alternating with the 'High Score to Date', and the game is ready for play. Coin game. The game should accept the coin and post credits* for coins accepted (adjustable). Pressing the credit button on the door will cause the outhole kicker to serve the ball to the shooter alley. The 1st player-up lite is lit. A game-up tune* is played to announce play-readiness. The bonus score is advanced to 1000 points.

One player is posted each additional time the credit button is pressed (one to four can play). The credits are reduced by one each time the credit button is pressed until the credits are reduced to zero.

Shooting the ball initiates play. Rebound switches score 10 points. Thumper-bumpers, when not lit, score 10 points.

The game awards all points earned by the player. If spinner is turning and scoring when the ball hits a target, the spinner and the target scores are awarded.

When the ball enters the outhole, the bonus score is added to the total score. The player-up and/or ball in play on the back box is advanced one position. The bonus score is advanced to 1000 points. The outhole kicker serves the ball to the shooter alley and play is resumed. This continues until each player has played the allowable number of balls per game (adjustable). At this time the 'Game Over' light is lit. A random Match* number appears and the 'Match' light is lit. If the number is the same as the last two digits in a player's score, a free game is awarded.

Extra balls won during the course of the game are played immediately after the player's regular ball enters the outhole. The player-up and/or ball in play on the back box are not advanced for extra ball play. Bonus score is added to the player's score and the bonus is set to 1000 points before the game serves the extra ball for play.

Scoring over 1,000,000 gives "High Score to Date" award.
At the end of the game, a 'High Score to Date' is alternately flashed with all 4 player scores. If the 'High Score to Date' is beat, this feature* awards free games.

Tilting the game results in loss of a ball. The flippers, thumper-bumpers, etc., go 'dead.' Bonus points are not scored. The purpose of the tilt penalty is to discourage the player from jostling the machine in an attempt to prolong play. Game action becomes normal after the ball kicker assembly serves the ball to the shooter alley.

Slamming the machine results in loss of the game. All feature lights go out, the game goes 'dead,' and a time delay occurs. The purpose of the time delay is to discourage unnecessary abuse of the machine. After the delay, the 'Game Over' light lites and the power-up tune is played. The time delay occurs anytime one of the slam switches is made to contact. There is one factory installed slam switch on the front door. (Any number of slam switches could be installed by the operator, to meet his individual requirement.) The switch should be adjusted to have approximately 1/16" gap between the contacts. The weighted blade should be adjusted to attain the desired sensitivity. Decreasing the gap between contacts will make the switch more sensitive. Opening the gap will reduce sensitivity.

*Some tunes and features can be disabled by operator if so desired. See Back Box Adjustments.

III. BOOKKEEPING FUNCTIONS

The game is designed to help the operator certain perform accounting functions. The game can display the number of total plays and replays (free games). It can display the number of coins dropped down each coin chute. The bookkeeping functions are displayed on all player score displays simultaneously. An identification number, 05 to 14, appears on the Match/Ball in Play window as follows:

05— 00 to— 40=Current Credits
*06—10000 to—99999=Total Plays (Payed & Free Games)
*07—10000 to—99999=Total Replays (Free Games)
08— 00 to—99999=Total times 'High Score to Date' is beat
*09—10000 to—99999=Coins Dropped thru Coin Chute #1
*10—10000 to—99999=Coins Dropped thru Coin Chute #2**
*11—10000 to—99999=Coins Dropped thru Coin Chute #3**
*12— 00 to—99999=Number of Specials awarded from Panel Specials Only
*13— 00 to—99999=Number of minutes of Game Play
*14— 00 to—99999=Number of Service Credits

The game displays the first bookkeeping entry if the Self-Test button (See Fig. III) on the inside of the front door is pressed ten times. Alternately push and release the Self-Test button at one second intervals. The number 05 appears in the 'Match/Ball in Play' window. Current credits appear on the player score displays. Each additional press of the button causes the next entry to be displayed.

After the data in each bookkeeping register is recorded, it can be set to zero simply by pressing switch button S33, located on A4, the MPU module in the back box (See Fig. III), or by pressing the Coin Chute #3 switch. Any or all registers can be cleared by alternating between the Self-Test button and the switch button S33 on the MPU module or Coin Chute #3 switch. The operator is given this option as a possible convenience and can elect to use or not use it as his needs direct.

Pressing the button once more with the 14th entry displayed causes the game to play the power-up tune and light the Game Over light.

Service credits are designed to allow the serviceman to test the game under actual play conditions without disturbing the bookkeeping records that reside at identification numbers 06, 07, 09, 10 and 11.

To obtain Service Credits, push and release the Self-Test switch until identification number 05 appears in the 'Match/Ball in Play' window. Hold in the Credit button until the desired number of Service Credits (up to five) apears on the player score displays.

NOTE: If, upon accessing identification number 05, a number of credits greater than five is displayed, pressing the credit button has no effect.

Identification number 14 is reserved as a record of the number of Service Credits used.

*The 10,000 level is pre-set at the factory; can be set to zero, initially, if desired.

**If Coin Chute is not used in game, number displayed (if other than 00) on Player Score displays has no significance.

IV. FEATURE OPERATION & SCORING

A. BONUS SCORE FEATURE

A bonus score of 1000 to 99,000 points may be scored. The game starts with a bonus score of 1000 points. The bonus score advances one step at a time each time the ball hits anyone of the droptargets, the center INVADER TARGET, the hoop or a ball through either return lane. The CLONE CHAMBER target scores three (3) bonus advances.

20-40-60 BONUS
The 20-40-60 BONUS is increased in 20,000 point increments.
Completing the five RED INVADERS:
The 1st time lights the 20 thousand light
The 2nd time lights the 40 thousand light
The 3rd time lights the 60 thousand and the Invader SPECIAL.

B. BONUS COLLECT AND BONUS MULTIPLIER

When the ball goes into the outhole, the lit bonus score is added to the player's total score. If the 2X light is lit, twice the amount is added to the player's score. The bonus may also be collected by the MYSTERY SHIP ROLLOVER.

C. MEMORY BONUS FEATURES

The 20-40-60 bonus will remain the memory and be lit with the start of each new ball. The 20,000 from the outhole bonus will also be held in memory.

D. CLONE CHAMBER FEATURE

This feature consists of a captive ball on the left side of the playfield which can score from 10,000 to 50,000. The value of this feature starts at 10,000 at the beginning of a new game. Hitting the target in the CLONE CHAMBER scores and increases this value and held in memory.

SW. #24

On: Top center rollover scores and increases clone value w/L
Off: Top center rollover only scores clone value w/L

E. RED INVADER FEATURE

This feature consists of five (5) targets which when completed advance the 20-40-60 bonus.
The 1st time lights the 20 thousand light
The 2nd time lights the 40 thousand light
The 3rd time lights the 60 thousand light and Special
The 4th and each additional time scores special.

#23 RED INVADER	ON:	MEMORY
	OFF:	NO MEMORY

F. BLUE INVADER FEATURE

This feature consists of five (5) rollover lanes. Knocking out the three (3) BLUE INVADERS at the top of the playfield lights the center rollover to score the CLONE CHAMBER value. Completing all five (5), lights the rollover lanes for extra balls and the center target arrow for 5000 and three (3) bonus advances.

BLUE INVADER SW. 32	ON:	TIED
	OFF:	SEPARATE

G. BONUS ACCELERATOR

This feature is located in the center of the playfield. A ball through the hoop:

	3-BALL	5-BALL
The 1st time	5000 + 2X	5000
The 2nd time	5000 + 3X	2X + 5000
The 3rd time	5000 + 4X	3X + 5000
The 4th time	5000 + 5X	4X + 5000
The 5th time	25000	5X + 5000
The 6th time	5000 + SPECIAL	25,000
The 7th time	25000	SPECIAL + 5000
The 8th time	5000 + SPECIAL	25,000
The 9th time	25000	SPECIAL + 5000
ETC.		

H. MYSTERY SHIP

This feature consists of three sections. The target, the rollover and the 50,000 increased value feature. The drop target scores 500 points and one bonus advance. This target when down opens the rollover for collecting the bonus. The value of either the target or the rollover are increased 50,000 points when lit. These lights are lit randomly.

I. DROPTARGET FEATURE

Knocking down all the droptargets scores lit value.
1st time 10,000
2nd time 15,000
3rd time 20,000
4th time 25,000
5th and each additional time scores special.

J. SPECIAL REPLAY/X-BALL/NOVELTY MODES

Switch #6 and #7 give the operator flexibility to award a replay, extra ball or score (Novelty) when a special is scored (hoop SPECIALS drop target, 5 Invader feature). The following chart explains the settings.

SWITCH	SW. 6-ON SW. 7-ON	SW. 6-OFF SW. 7-ON	SW. 6-ON SW. 7-OFF
Positions	REPLAY	X-BALL	NOVELTY
Outlane special	REPLAY	X-BALL*	50,000
Drop target special	REPLAY	X-BALL*	50,000
5 Invader special	REPLAY	X-BALL*	50,000
Left or right hoop special	REPLAY	X-BALL*	50,000
Left or right extra ball lane	X-BALL	X-BALL**	25,000
Scoring thresholds	REPLAY	X-BALL**	NO AWARD

*50,000 if Same Player Shoot Again is lit.
**25,000 if Same Player Shoot Again is lit.

V. GAME ADJUSTMENTS

A. Playfield Panel Post Adjustments:

Posts that control left and right outlane opening on panel can be moved to make access to outlanes easier or harder for ball to enter. See Figure II.

Easier entry will decrease playing time and scoring (conservative).
Harder entry will increase playing time and scoring (liberal).

B. Back Box Game Adjustments:

Each game has thirty-two switches located on A4, the MPU module, located in the back box, that allow play to be customized to the location. See Figure III. Credits per coin, maximum credits, credit display, balls per game, match feature, high game feature, special award and melody are selectable by means of the switches. The switches are contained in four-sixteen lead packages numbered S1-8, S9-16, S17-24 and S25-32 for easy identification. The "ON" toggle position is marked on the assembly. **Turn off power before making adjustments.**

Credits/Coin Adjustments:

The credits per coin are selectable by means of S17-S20 for coin chute #2. The switch settings and resultant credits/coin are as follows:

S20	S19	S18	S17	Credits/Coin
OFF	OFF	OFF	OFF	Same as Coin Chute #1 Settings
OFF	OFF	OFF	ON	1/1 Coin
OFF	OFF	ON	OFF	2/1 Coin
OFF	OFF	ON	ON	3/1 Coin
OFF	ON	OFF	OFF	4/1 Coin
OFF	ON	OFF	ON	5/1 Coin
OFF	ON	ON	OFF	6/1 Coin
OFF	ON	ON	ON	7/1 Coin
ON	OFF	OFF	OFF	8/1 Coin
ON	OFF	OFF	ON	9/1 Coin
ON	OFF	ON	OFF	10/1 Coin
ON	OFF	ON	ON	11/1 Coin
ON	ON	OFF	OFF	12/1 Coin
ON	ON	OFF	ON	13/1 Coin
ON	ON	ON	OFF	14/1 Coin
ON	ON	ON	ON	15/1 Coin

The credits given per coin are selectable by means of switches 1-5 incl., for coin chute #1 and switches 9-13 incl., for coin chute #3. Thirty-one different credit ratios are available for each coin chute. The switch settings and resultant credits/coin are listed below.

CREDITS/COIN ADJUSTMENTS

COIN CHUTE	SWITCHES					CREDITS/COIN
#1 (HINGE SIDE)	5	4	3	2	1	
OR #3	13	12	11	10	9	
	OFF	OFF	OFF	OFF	OFF	3/2 COINS**
	OFF	OFF	OFF	OFF	ON	3/2 COINS**
	OFF	OFF	OFF	ON	OFF	1/COIN
	OFF	OFF	OFF	ON	ON	1/2 COINS*
	OFF	OFF	ON	OFF	OFF	2/COIN
	OFF	OFF	ON	OFF	ON	2/2 COINS*
	OFF	OFF	ON	ON	OFF	3/COIN
	OFF	OFF	ON	ON	ON	3/2 COINS*
	OFF	ON	OFF	OFF	OFF	4/COIN
	OFF	ON	OFF	OFF	ON	4/2 COINS*
	OFF	ON	OFF	ON	OFF	5/COIN
	OFF	ON	OFF	ON	ON	5/2 COINS*
	OFF	ON	ON	OFF	OFF	6/COIN
	OFF	ON	ON	OFF	ON	6/2 COINS*
	OFF	ON	ON	ON	OFF	7/COIN
	OFF	ON	ON	ON	ON	7/2 COINS*
	ON	OFF	OFF	OFF	OFF	8/COIN
	ON	OFF	OFF	OFF	ON	8/2 COINS*
	ON	OFF	OFF	ON	OFF	9/COIN
	ON	OFF	OFF	ON	ON	9/2 COINS*
	ON	OFF	ON	OFF	OFF	10/COIN
	ON	OFF	ON	OFF	ON	10/2 COINS*
	ON	OFF	ON	ON	OFF	11/COIN
	ON	OFF	ON	ON	ON	11/2 COINS*
	ON	ON	OFF	OFF	OFF	12/COIN
	ON	ON	OFF	OFF	ON	12/2 COINS*
	ON	ON	OFF	ON	OFF	13/COIN
	ON	ON	OFF	ON	ON	13/2 COINS*
	ON	ON	ON	OFF	OFF	14/COIN
	ON	ON	ON	OFF	ON	14/2 COINS*
	ON	ON	ON	ON	OFF	3/4 COINS***
	ON	ON	ON	ON	ON	3/4 COINS***

*No Credits until second coin is dropped.

**One Credit for first coin. Two Credits for second coin provided that no scoring occured between 1st and 2nd coin drops. If scoring occured, second coin gives one credit.

***No Credit for first coin. One Credit for second coin. No Credit for 3rd coin and 2 Credits for 4th coin, provided that no scoring occured between 2nd and 4th coin. If scoring occured, 4th coin gives one credit.

MAXIMUM CREDITS:

The maximum credits accepted by the machine limits the number of games that can be accumulated by coining, by winning replays or both. The maximum number of credits is selectable by means of switches 25 and 26. Four credit limits are available. Switch settings are listed below.

MAXIMUM CREDITS	SWITCHES 26	25
10	OFF	OFF
15	OFF	ON
25	ON	OFF
40	ON	ON

BALLS PER GAME:

# BALLS/GAME	SWITCH 31
5	ON
3	OFF

MATCH FEATURE:

When the Match Feature is ON, a random number appears in the Match/Ball in Play window and the word MATCH is illuminated. If the number matches the tens digit in a player's score, a free game is awarded. The Match feature creates an incentive to play.

MATCH	SWITCH 28
ON	ON
OFF	OFF

CREDIT DISPLAY:

CREDITS DISPLAYED	SWITCH 27
YES	ON
NO	OFF

HIGH SCORE FEATURE:

The game is designed to award an Extra Ball or Free Game at each of the three score levels. See Front Door Game Adjustments.

AWARD	SWITCH 7	SWITCH 6
REPLAY	ON	ON
EXTRA BALL	ON	OFF
NO AWARD	OFF	ON

HIGH SCORE TO DATE OR OVER 1,000,000 SCORE FEATURE:

The game is designed to award free games as an option if high score to date is beat or player exceeds 1,000,000 points. Each time this happens, the winning score becomes the new high score to beat. This score is displayed on all 4 player score displays at the end of each game as an incentive to play. Recommended setting is underlined.

HIGH SCORE TO DATE FEATURE	SWITCH 22	SWITCH 21
No Award	OFF	OFF
One Credit	OFF	ON
Two Credits	ON	OFF
<u>Three Credits</u>	<u>ON</u>	<u>ON</u>

State and local laws may regulate the use of the above features, and they have been designed to allow for appropriate adjustment in order to conform to such requirements.

#1178 SPACE INVADERS

SOUND OPTION:

The game is designed to make several tones and noises to announce power-up, game-up, etc. The tones are intended to attract attention to the game and increase game usage. The tones are controlled by switch settings as shown.

SW. 29, 30 ON
Playfield switches associated noises with background.

SW. 29 ON, SW. 30 OFF
Playfield switches associated noises without background.

SW. 29, 30 OFF
Most scoring will have a chime effect.

SW. 29 OFF, SW. 30 ON
Most all scoring will have a noise effect.

GAME FEATURE OPTIONS:

Flipper button sound adjustment:

	SW. 8 ON	Energizing flippers makes a blast noise.
	SW. 8 OFF	Blast noise is OFF.

Thumper Bumpers 100 or 1000 score adjustment:

Liberal	SW. 14 ON	Thumpers score 1000.
Conservative	SW. 14 OFF	Thumpers score 100.

Background thumping sound adjustment:

	SW. 15 ON	Thumping sound is ON.
	SW. 15 OFF	Thumping sound is OFF.

Small flipper feed lanes lite adjustment:

Liberal	SW. 16 ON	Invader lites are tied together.
Conservative	SW. 16 OFF	Invader lites are separate.

Red Invader target lites recall adjustment:

Liberal	SW. 23 ON	Target lites out will not come back on.
Conservative	SW. 23 OFF	Target lites out will come back on.

Top Clone Chamber lite adjustment:

Liberal	SW. 24 ON	Going thru center lane steps up the Clone Chamber value.
Conservative	SW. 24 OFF	Going thru center lane does not step up the Chamber value.

Left & Right Extra ball arrow lane adjustment:

Liberal	SW. 32 ON	Both lites come on.
Conservative	SW. 32 OFF	1 lite comes on then alternates.

C. FRONT DOOR GAME ADJUSTMENTS

High Score Feature Adjustments:

The game is designed to award an extra ball (option) or a free game at each of three score levels. The recommended levels are on the score card in the game.

Any level from 10,000 to 990,000 can be set, as desired. It is also possible to reset or turn off (00) any or all of the levels, if desired.

1. Push and release Self-Test button (See Figure III) at one second intervals approximately six times or until identification number 01 appears on the 'Match/Ball in Play' display.

2. The number on the Player Score Displays is the score level.* It can be increased, if desired, by holding the credit button in. To decrease the score level, hold the credit button in and depress and release the Self-Test button. Release the credit button when the desired number appears. Note that the level changes 10,000 points at a time. If the number '00' is left on the displays, the high score feature is eliminated for that level.

3. Repeat steps 1 and 2 for the second and third score levels. The identification numbers '02' and '03' on the Match/Ball in Play display are for the second and third levels, respectively.

High Score to Date and 1,000,000 Feature:

The game is designed to award free games when 'High Score to Date' is beat, or if the player exceeds 1,000,000 points.

It is recommended that the level, which will build with play, be periodically reset to the factory recommended level to encourage game play. The adjustment procedure is the same as for the High Score Feature Adjustment, Steps 1 and 2. Continue pushing the Self-Test button until the identification number '04' appears on the 'Match/Ball in Play' display and then do Step 2.

Any level from '00' to 990,000 can be set as described. It is to be noted that '00' does NOT turn off the feature, as it does on High Score feature. The feature is turned off by positioning switches as discussed under 'Back Box Game Adjustments.'

*Can be quickly set to '00' by pressing S33 on the MPU assembly in the back box or Coin Chute switch #3. (See Figure III).

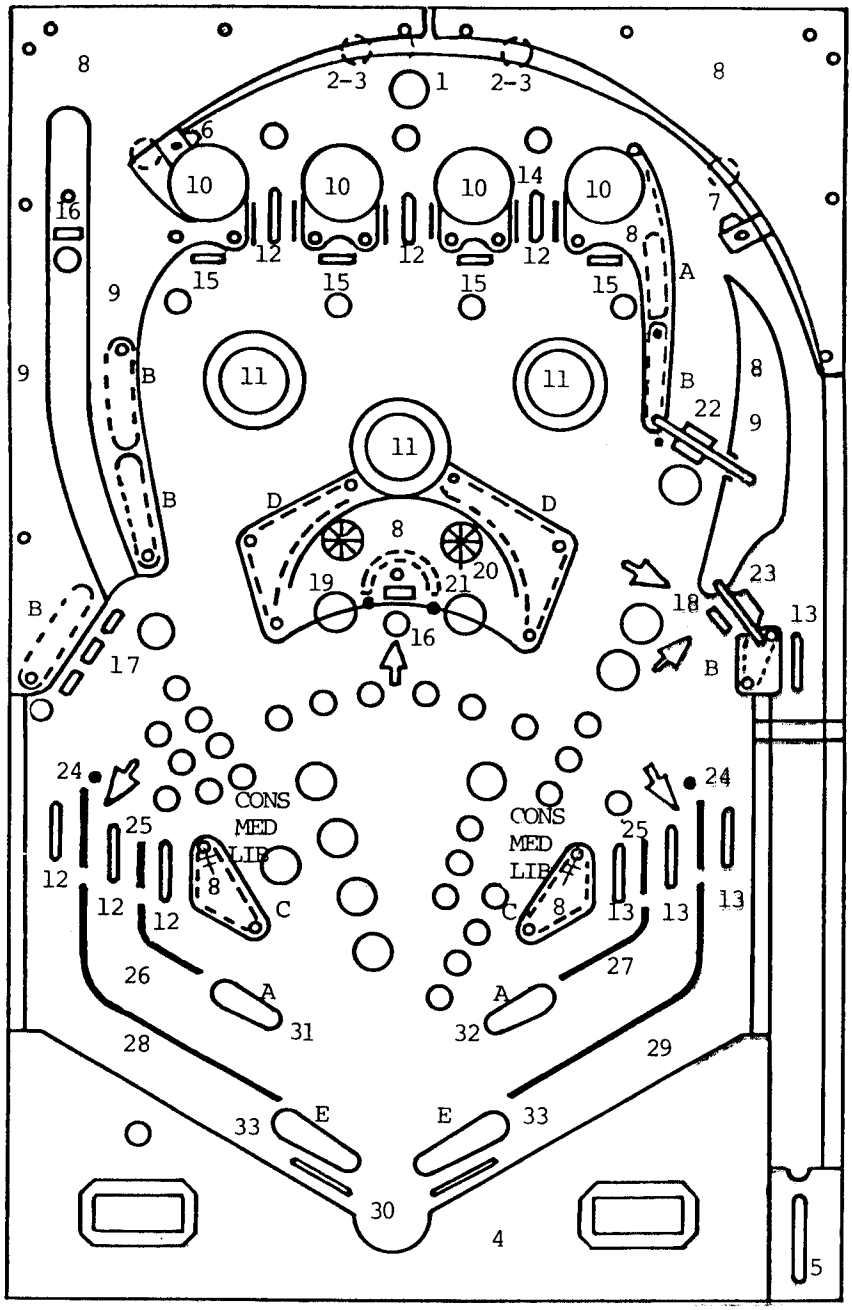

#1178 SPACE INVADERS

RUBBER PARTS

A.	R-521-1	1" DIA.	(5)
B.	R-521-2	1½" DIA.	(5)
C.	R-521-3	2" DIA.	(2)
D.	R-521-4	2½" DIA.	(2)
E.	R-406-3	FLIPPER	(2)
F.	R-243	5/16" DIA.	(10)

PANEL TOP PARTS

1.	Arch Rail	M-1774-3	
2.	Rail Post	C-907	(4)
3.	Rail Post Cap	C-908	(4)
4.	Bottom Arch	P-5871-74	
5.	Shooter Gauge	P-6359-40	
6.	Ball Gate (L)	A-1475-12	
7.	Ball Gate (R)	A-1475-13	
8.	Screened Plastics (Set)	M-1330-169	
9.	Clear Plastics (Set)	A-2890-143	
10.	Bumper Cap	A-3852-2	(4)
11.	Thumper Bumper Cap	A-3713-61	(3)
12.	R.O. Wire & Brkt.	AS-2806	(6)
13.	R.O. Wire & Brkt.	AS-2806-1	(4)
14.	Ball Guide Wire	M-121-32	(7)
15.	Target Assembly (Red)	ASE-2911-3	(4)
16.	Target Assembly (White)	ASE-2911-20	(2)
17.	Drop Target Assy.	ASE-2795-31	
18.	In Line Target Assy.	ASE-2993-5	
19.	Ball Guide Assy.	A-3032-34	
20.	R.O. Button	C-900	(2)
21.	Ball Guide	M-121-96	
22.	Spinner Gate Assy.	ASE-2250-64	
23.	Ball Gate Wire Assy.	ASE-2250-27	
24.	Ball Guide	M-121-24	(2)
25.	Ball Guide	M-121-46	(3)
26.	Ball Guide	M-121-78	
27.	Ball Guide	M-121-79	
28.	Ball Guide	M-121-94	
29.	Ball Guide	M-121-95	
30.	Buffer Wire	M-121-53	(2)
31.	Flipper & Shaft	ASE-2214-25	
32.	Flipper & Shaft	ASE-2214-26	
33.	Flipper & Shaft	ASE-2214-24	(2)

CONS.—Conservative
MED. —Medium
LIB. —Liberal

Indicates Movable Posts for Scoring Adjustment

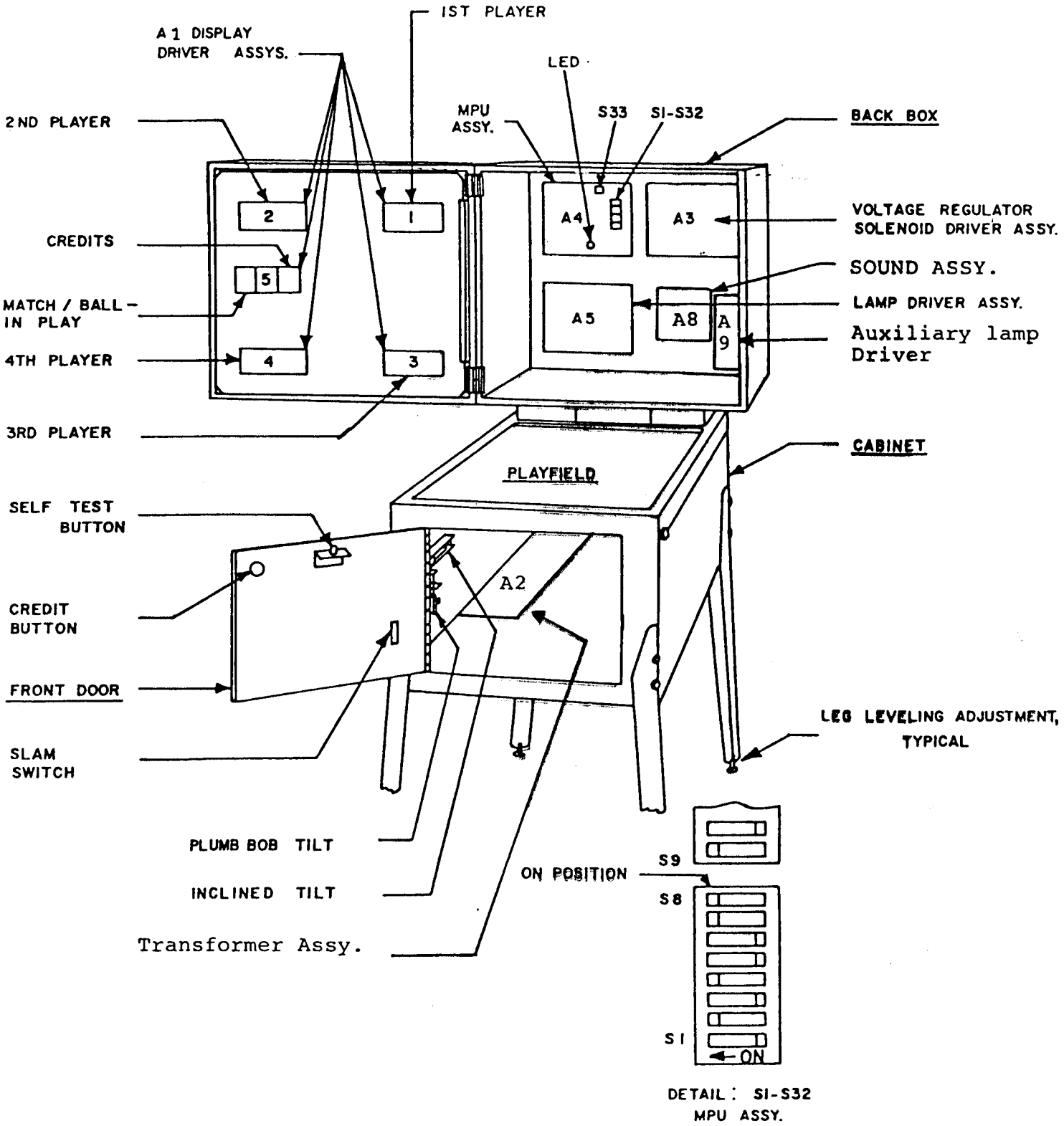

FIGURE III. ELECTRONIC PIN BALL MACHINE

RECOMMENDED

Instruction, Score Cards and High Score Feature Settings
to be used on **SPACE INVADERS 1178**

3-BALL

REPLAYS

Instruction Card	M-1508-89-E
Score Card	M-1508-89-B
1 Replay at 350,000	
1 Replay at 700,000	

5-BALL

REPLAYS

Instruction Card	M-1508-89-E
Score Card	M-1508-89-A
1 Replay at 460,000	
1 Replay at 780,000	

EXTRA BALL

Instruction Card	M-1508-89-F
Score Card	M-1508-89-A W/RR
1 Extra Ball at 390,000	
1 Extra Ball at 630,000	
1 Extra Ball at 850,000	

ADDITIONAL CARDS

REPLAYS

M-1508-H	120,000	360,000	
M-1508-I	140,000	380,000	
M-1508-J	160,000	400,000	
M-1508-K	180,000	420,000	
M-1508-L	200,000	440,000	
M-1508-M	220,000	460,000	
M-1508-N	240,000	480,000	
M-1508-O	260,000	500,000	
M-1508-P	280,000	520,000	
M-1508-Q	300,000	540,000	
M-1508-R	320,000	560,000	
M-1508-S	340,000	580,000	
M-1508-T	360,000	600,000	
M-1508-U	380,000	620,000	
M-1508-V	400,000	640,000	
M-1508-W	420,000	660,000	
M-1508-X	440,000	680,000	
M-1508-Y	460,000	700,000	
M-1508-AA	140,000	430,000	580,000
M-1508-BB	160,000	450,000	600,000
M-1508-CC	180,000	470,000	620,000
M-1508-DD	200,000	490,000	640,000
M-1508-EE	220,000	510,000	660,000
M-1508-FF	240,000	530,000	680,000
M-1508-GG	260,000	550,000	700,000
M-1508-HH	280,000	570,000	720,000
M-1508-II	300,000	590,000	740,000
M-1508-JJ	320,000	610,000	760,000
M-1508-KK	340,000	630,000	780,000
M-1508-LL	360,000	650,000	800,000

EXTRA BALL

M-1508-MM	240,000	480,000	700,000
M-1508-NN	270,000	510,000	730,000
M-1508-OO	300,000	540,000	760,000
M-1508-PP	330,000	570,000	790,000
M-1508-QQ	360,000	600,000	820,000
M-1508-RR	390,000	630,000	850,000
M-1508-SS	420,000	660,000	880,000

Instruction Card, Novelty
M-1508-89-G

BLANKS (3)
High game to date recommended levels;
(reset periodically)
3 BALL 780,000
5 BALL 860,000

#1178 SPACE INVADERS

RECOMMENDED SETTINGS

SPECIAL: REPLAY		3 BALL	5 BALL
	SW. 6	ON	ON
	SW. 7	ON	ON
FLIPPER BUTTON BLAST SOUND	SW. 8	ON	ON
THUMPER BUMPER 100 or 1000 SCORE	SW. 14	OFF	OFF
BACKGROUND THUMPING SOUND	SW. 15	ON	ON
SMALL FLIPPER FEED LANES LITE	SW. 16	OFF	OFF
INVADER TARGETS LITE RECALL	SW. 23	ON	OFF
TOP CLONE CHAMBER LITE	SW. 24	ON	OFF
LEFT & RIGHT EXTRA BALL ARROW LANE	SW. 32	OFF	OFF

	3 BALL	5 BALL
REPLAY		
Instruction Card	M-1508-89-E	M-1508-89-E
Score Card	M-1508-89-B	M-1508-89-A
Major Mode	SW. 6, 7, ON	SW. 6, 7, ON
Match	SW. 28 ON	SW. 28 ON
High Score to Date	SW. 21, 22, ON	SW. 21, 22, ON
X-BALL		
Instruction Card		M-1508-89-F
Score Card		M-1508-89-A W/RR
Major Mode		SW. 6 OFF
		SW. 7 ON
Match		SW. 28 OFF
High Score to Date		SW. 21, 22, OFF
NOVELTY		
Instruction Card	M-1508-89-G	M-1508-89-G
Major Mode	SW. 6 ON, 7 OFF	SW. 6 ON, 7 OFF
Match	SW. 28 OFF	SW. 28 OFF
High Score to Date	SW. 21, 22, OFF	SW. 21, 22, OFF

ADDITIONAL CARDS FOR PAGE 11

REPLAYS

M-1508-UU	480,000	720,000	
M-1508-VV	500,000	740,000	
M-1508-WW	520,000	760,000	
M-1508-XX	540,000	780,000	
M-1508-YY	560,000	800,000	
M-1508-ZZ	580,000	820,000	
M-1508-AAA	600,000	840,000	
M-1508-BBB	620,000	860,000	
M-1508-CCC	640,000	880,000	
M-1508-DDD	660,000	900,000	
M-1508-EEE	380,000	670,000	820,000
M-1508-FFF	400,000	690,000	840,000
M-1508-GGG	420,000	710,000	860,000
M-1508-HHH	440,000	730,000	880,000
M-1508-III	460,000	750,000	900,000
M-1508-JJJ	480,000	770,000	920,000
M-1508-KKK	500,000	790,000	940,000
M-1508-LLL	520,000	810,000	960,000
M-1508-MMM	540,000	830,000	980,000
M-1508-NNN	560,000	850,000	990,000

VIII. ROUTINE MAINTENANCE ON LOCATION:

Self-Test routines are written into the game design. They are particularly useful for routine maintenance. The tests are described below. The first test is automatic and occurs on power-up. This test causes the MPU module A4 to examine itself for failures. Seven flashes of an LED indicates proper operation. The second series of self-diagnostic tests causes the MPU to 'exercise' each of the other modules in such a way as to make their faults, if any, obvious. See Figure III and Page ii.

It is recommended that these tests be used several times a week to check out the games before play. If faults are discovered, they may be corrected on location if the operator has a stock of replacement modules. See "Trouble Shooting on Location."

MPU Module Self-Test:
At power on, the LED on the MPU module flashes once. (Flicker-Flash). After a pause, it flashes six more times and goes out. A power-up tune is played to announce game readiness. This indicates proper MPU operating condition and successful completion of the power-up test.

Game Self-Diagnostic Tests:

1. Pressing the Self-Test button inside the door initiates the Self-Test routine. See Figures III and IV. All switched lamps flash off and on continuously.

2. Pressing the Self-Test button again causes each digit on each display to cycle from 0 thru 9, and repeat continuously.

3. Pressing the Self-Test button again causes each solenoid to be energized, one at a time, in a continuous sequence. Hold both flipper buttons 'in' during this test. The number appearing on the Player Score displays is the same as the number assigned to the solenoid. The sound of a solenoid pulling-in as a number appears indicates proper operation. The absence of sound is improper. If sound is absent, see Page 17 for help in Solenoid identification.

4. Pressing Self-Test button again causes the sound module to play the "Game Over" tune repeatedly.

5. Pressing the Self-Test button again causes the MPU to search each switch assembly for stuck contacts. If any are found, the number of the first set encountered is flashed on the Player Score displays. The number remains until the fault is cleared. See Page 17 for help in Stuck Switch identification. Other numbers may follow if more stuck contacts are present. If there are no stuck switches, the Match/Ball in Play display flashes '0'.

6. Pressing the Self-Test button 14 more times causes the MPU to step thru the threshold and bookkeeping functions described previously and finally to repeat the power-up test. For more rapid exit to power-up, turn the game off, then on. The game is now ready to play.

After successful completion of the Self Diagnostic Test procedure, set the game up for play. Exercise each rollover, thumper-bumper, slingshot, etc., by hand until each switch assembly on the playfield has been checked for proper operation. If actuating a switch assembly results in intermittent or no response, clean contacts by gently closing them on a clean business card or piece of paper and wiping until they wipe clean. Regap, if necessary, to 1/16". **Do not burnish or file Gold Plated Switch Contacts.**

IX. TROUBLESHOOTING ON LOCATION

The game is designed to make troubleshooting easy. Several simple procedures are given herein that cover the greatest percentage of game failures. They are written for an operator on location and require module replacement. (See Figure III) Symptoms and the action to be taken are given for each type of problem.

If the problem is more complicated and is not solved by following this procedure, more detailed procedures are available from Bally. See the Parts List for ordering information.

FIGURE IV SELF DIAGNOSTIC TEST

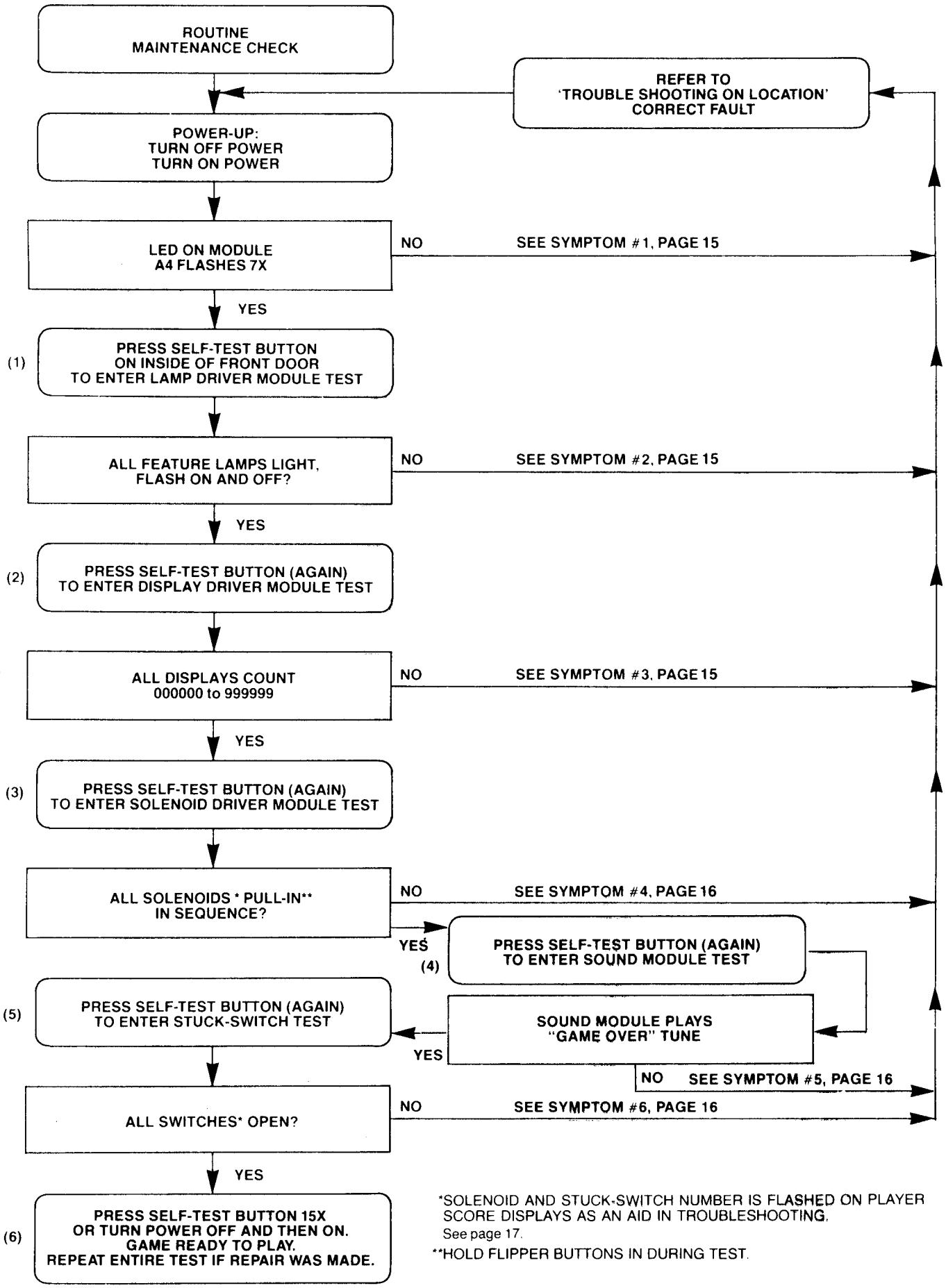

*SOLENOID AND STUCK-SWITCH NUMBER IS FLASHED ON PLAYER SCORE DISPLAYS AS AN AID IN TROUBLESHOOTING.
See page 17.

**HOLD FLIPPER BUTTONS IN DURING TEST.

1A) **SYMPTOM:** Game does not play power-up tune when power is turned on. General Illumination is present.

ACTION: **A)** Turn power OFF. Open back box. Locate light emitting diode (LED) on MPU module A4.

B) Turn Power ON. LED must flash 7X to indicate that module A4 is good. Correct flash sequence is flicker/flash-pause-and then six more flashes and LED goes out.

C. If LED does not come on, or does not flash, or flashes, but less than 7X, turn off power. Replace MPU module A4.

CAUTION: **Replacement MPU Module must have same Part Number or incorrect operation will result! See Parts List for MPU Module Part Number.**

Turn power ON.

D) If game is correct, it is now ready for play. If game is not correct, refer to Module Replacement procedure. (See Parts List.)

2A) **SYMPTOM:** Not all feature lamps light during game play.

ACTION: **A)** With power ON, open front door. Press button (Self-Test switch) once. If the game is correct, **all** feature lamps flash ON and OFF.

B) Carefully raise playfield or open back box to gain access to lamps.

C) Replace bulbs that do not flash.

D) If game is correct, it is now ready for play.

E) If game is not correct, turn power OFF. Replace Lamp Driver Module A5. Turn power ON and repeat A.

F) If game is correct, if is now ready for play.*

G) If game is not correct, turn power OFF. Replace MPU module A4. See CAUTION, 1C. Turn power ON and repeat A.

H) If game is correct, it is now ready for play.* If game is not correct, refer to Module Replacement procedure. (See Parts List.)

2B) **SYMPTOM:** One or some switched lamps always ON.

ACTION: Repeat 2AA, AB, AE, and AF and, if necessary AG & AH.

3A) **SYMPTOM:** Display digits improper on **one** or **several,** but less than all Display Driver module(s), A1. Improper: One or several segments always OFF, digits mottled or several segments or digit(s) always ON.

ACTION: **A)** With power ON, open front door. Press button (Self-Test switch) twice. If the game is correct, each digit on each Display Driver Module A1 (5 used/game) displays the count 1-9 and 0 continuously in all 6 digit positions. Note defective Display Driver modules.

B) Turn power OFF.

CAUTION: High Voltage is supplied to the Display Driver Modules, A1, from the Solenoid Driver/Voltage Regulator Module A3. Wait 30 seconds for High Voltage to Bleed Off.

C) Replace Display Driver module(s) A1. Turn power ON. Repeat A.

D) If game is correct, it is now ready to play.* If game is not correct, refer to Module Replacement procedure. (See Parts List.)

3B) **SYMPTOM:** **All** displays improper (all five display Driver modules). Improper: Digit(s) always on or off/segment(s) always on or off, all displays.

ACTION: **A)** Repeat 3AA, and AB.

B) Replace MPU module A4. See CAUTION NOTE, 1C. Turn power ON. Repeat A.

C) If game is correct, it is now ready to play.* If game is not correct, refer to Module Replacement procedure. (See Parts List.)

3C) SYMPTON: One or several displays always off.

ACTION: **A)** Do 3AA, AB, AC, and AD.

B) Repeat 3BB and BC, if necessary.

4A) SYMPTOM: Solenoid(s) do(es) not pull-in during course of game.

ACTION: **A)** With power ON, open front door. Press button (Self-Test switch) three times.

B) If game was correct, each solenoid would be energized. A number is flashed on the Player Score displays as each solenoid is pulsed. Note any numbers that do not have the sound of a solenoid associated. See Solenoid Identification Table, Page 17 and Figure V.

C) Carefully lift the playfield (or open the back box) to gain access to the solenoid. Turn power OFF. Inspect the solenoid.

D) If a lead is broken off, repair. Repeat A & B. If game is correct, it is now ready for play.* If solenoid wiring was correct, turn power OFF.

E) Replace Solenoid Driver/Voltage Regulator module A3. See CAUTION NOTE 3AB.

F) Repeat AA & AB. If game is correct, it is now ready to play.* If game is not correct, turn power OFF.

G) Replace Sound Module A8.

H) Repeat AA and AB if game is correct. It is now ready to play. If game is not correct, turn power OFF."

I) Replace MPU module A4. See CAUTION NOTE, 1C.

J) Repeat A & B. If game is correct, it is now ready to play.* If game is not correct, refer to Module Replacement Procedure. (See Parts List.)

4B) SYMPTOM: Solenoid(s) always energized—Note: if impulse solenoids (ball ejects, slingshots, thumper-bumpers, etc.) are energized continuously, they are subject to damage. Limit troubleshooting to one minute with power ON, followed by **five minutes with power OFF.** Repeat as necessary. Replace damaged solenoids.

ACTION: Do 4AA, AB, AE, AF, AG, AH and if necessary, AI and AJ.

5) SYMPTOM: No Sound.

ACTION: **A)** With Power ON, open front door, press Self-Test switch four times.

B) Turn volume control clockwise to Max.

C) If correct, sound will be heard. If incorrect, try seating speaker lead connector (J2) and input connector (J1).

D) If correct, sound will be heard. If incorrect, refer to Module Replacement procedure."

6) SYMPTOM: Feature (Drop Targets, etc.) does not score.

ACTION: **A)** With power ON, open front door. Press button (Self-Test switch) five times.

B) If the game is correct, Match/Ball in Play display would flash '0.' If a number appears on the Player Score displays, see Switch Assembly Identification Table, Page 17 and Figure V.

C) Carefully lift the playfield. Locate the switch assembly identified from the number. Visually inspect the switch assembly. If the contacts are 'stuck,' regap them to 1/16". See section under ADJUSTMENTS. Repeat A & B. If the game is correct, it is now ready to play.* If game is not correct, turn the power OFF.

D) Replace MPU module A4. See CAUTION NOTE 1, C.

E) Repeat A & B. If the game is correct, it is now ready to play.* If the game is not correct, refer to Module Replacement Procedure. (See Parts List).

7) SYMPTOM: Game blows fuse(s) repeatedly.

ACTION: See Module Replacement Procedure. F.O. 560

*Turn power On-Off switch OFF and then ON.

GAME #1178 SPACE INVADERS (FIGURE V)
SOLENOID IDENTIFICATION TABLE

Self Test #	SOLENOID IDENTIFICATION
01	OUTHOLE KICKER
02	KNOCKER
03	LEFT SLINGSHOT
04	RIGHT SLINGSHOT
05	LEFT THUMPER BUMPER
06	RIGHT THUMPER BUMPER
07	BOTTOM THUMPER BUMPER
08	3 DROP TARGET RESET
09	SINGLE DROP TARGET
10	COIN LOCKOUT DOOR
11	KI RELAY (FLIPPER ENABLE)

SWITCH ASSEMBLY SELF-TEST DISPLAY NUMBERS

Switch Self Test #	DESCRIPTION
01	DROP TARGET #3 (BOT.)
02	DROP TARGET #2
03	DROP TARGET #1 (TOP)
04	SPINNER
05	50 POINT REB. (4), DROP TARGET & 4 TOP BUMPERS
06	CREDIT BUTTON
07	TILT (3)
08	OUTHOLE
09	COIN III (RIGHT)
10	COIN I (LEFT)
11	COIN II (MIDDLE)
12	
13	
14	
15	CLONE CHAMBER TARGET
16	SLAM (2)
17	#5 HOOP TARGET
18	#4 TARGET (FROM RIGHT)
19	#3 TARGET
20	#2 TARGET

Switch Self Test #	DESCRIPTION
21	#1 TARGET (FROM LEFT)
22	TOP RIGHT ROLLOVER
23	TOP CENTER ROLLOVER
24	TOP LEFT ROLLOVER
25	RIGHT OUT ROLLOVER
26	RIGHT EXTRA BALL LANE
27	RIGHT SMALL FLIP/FEED LANE
28	LEFT SMALL FLIP FEED LANE
29	LEFT EXTRA BALL LANE
30	LEFT OUTLANE
31	COLLECT BONUS ROLLOVER
32	HOOP R.O. BUTTON (2)
33	UPPER RIGHT FLIPPER
34	SINGLE DROP TARGET
35	UPPER LEFT FLIPPER
36	RIGHT SLINGSHOT
37	LEFT SLINGSHOT
38	BOTTOM THUMPER BUMPER
39	RIGHT THUMPER BUMPER
40	LEFT THUMPER BUMPER

→ PUSH FLIPPER UP BY HAND

NOTE: SLINGSHOT & THUMPER BUMPER COILS WILL BE ENERGIZED WHEN SWITCH IS MADE.

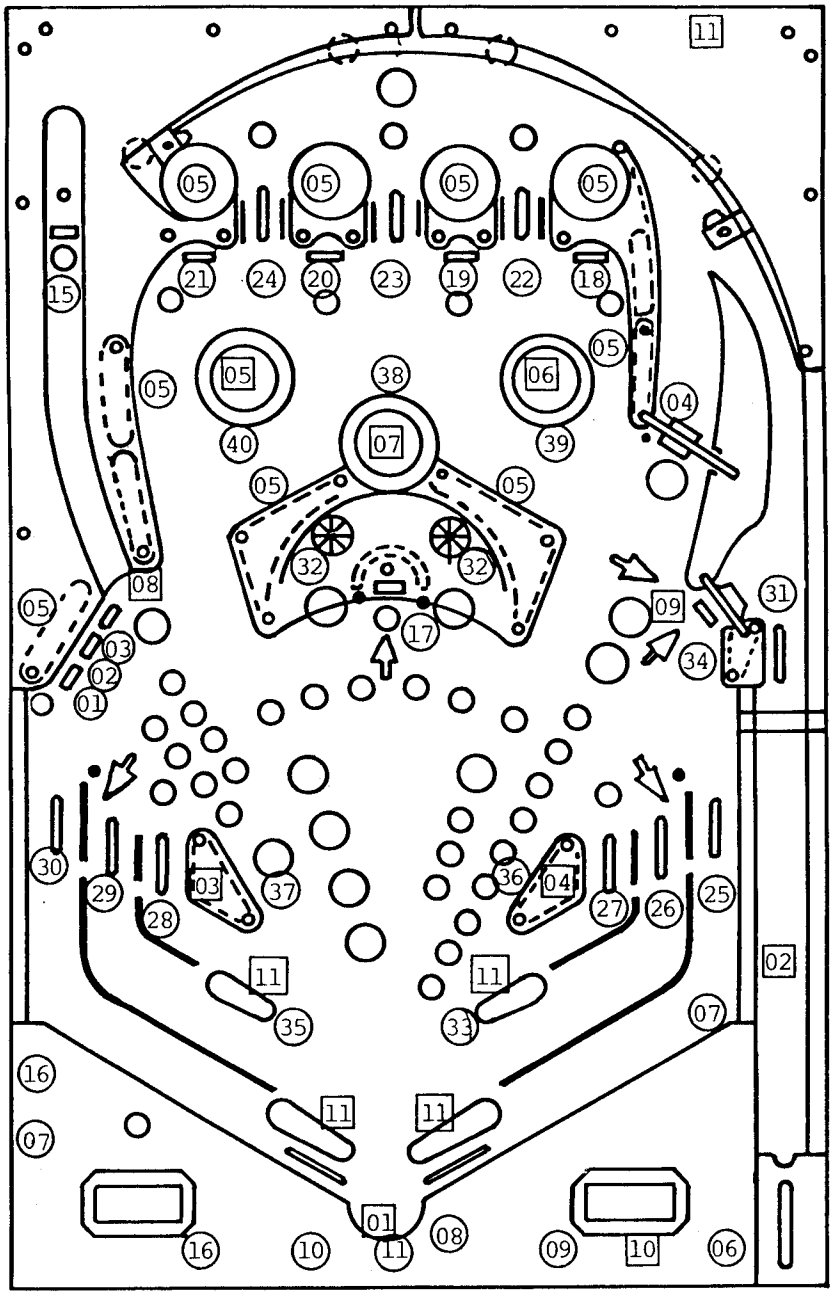

FIGURE V

#1178 SPACE INVADERS

○ INDICATES SWITCH ASSEMBLY IDENTIFICATION NUMBERS.
NOTE: CABINET: 07, 16
DOOR: 06, 09, 10, 11, 16

□ INDICATES SOLENOID IDENTIFICATION NUMBERS.
NOTE: DOOR: 10
BACKBOX: 11
CABINET: 02

ASSEMBLY ADJUSTMENTS:

GENERAL:

All switch assemblies consist of leaf springs, contacts, separators, plastic tubing and screws to hold them to the mounting surface. Before attempting to adjust a switch assembly, make sure that these screws are tight. If not, tighten screw closest to the contact end of the leaf spring first. This will prevent the assembly from being secured in such a manner that the leaf springs tend to fan out. In general, all leaf springs are adjusted for a 1/16" gap in the open position and .010" overtravel or wipe in the closed position. All contacts should be in good condition. Unless otherwise instructed, they should be dry or non-lubricated. All contacts should be free of dust and dirt. Contacts, with the exception of the flipper button switch assemblies, are plated to resist corrosion. Filing or burnishing breaks the finish and encourages corrosion. Clean by closing the contacts over a clean piece of paper (e.g. a business card) and wiping gently until the contacts are clean. For the flipper button switch assemblies **ONLY:** Tarnish can be removed with a contact file followed by a burnishing tool. Severely pitted contacts must be replaced as an assembly. In general, contacts need be cleaned or replaced and adjusted only when they are found to be a source of game malfunction.

X. SERVICE PARTS:

A parts catalogue is available upon request. The catalogue is illustrated and lists all replacement parts for each game manufactured by Bally. Requests should be addressed to:

BALLY MANUFACTURING CORPORATION
2640 WEST BELMONT AVENUE
CHICAGO, ILLINOIS 60618
ATTN: PARTS DEPARTMENT

SERVICE HINTS:

The Bally playfield has an improved tuff-coat finish with excellent wearing properties. Its life expectance, as well as play appeal, can be extended by periodic cleaning of the playfield.

DO: Bally recommends you clean your playfield with Wildcat #125 (Wildcat Chemical Co., 1333 W. Seminary Drive, Ft. Worth, Texas 76115). Wildcat #125 is a combination cleaner and polish. Bally has tried and tested this product and found it to be very effective. If Wildcat #125 is not available, Bally suggests you ask your Distributor to order it. Inspect and hand polish the ball in a clean cloth. A chipped ball must be replaced. It can ruin the finish on the playfield in a short period of time.

DON'T: Use water in large quantities, highly caustic cleaners, abrasive cleaners or cleaning pads on the playfield. Do not allow a wax or polish build up. Waxes yellow with age and spoil play appeal.

XI. PARTS LIST
#1178 SPACE INVADERS

MISCELLANEOUS	PART NUMBER
Transformer (Domestic or Export)	E-122-131
Bulbs, #44	E-125-22
Fuse, 1 Amp. 3 AG Slow Blow (Playfield Solenoid Protection)	E-133-44

ASSEMBLY COILS	
Coin Lockout	FO-36-7000
Flipper (4)	AQ-25-500/ 34-4500
Knocker	AR-26-1200
Outhole Kicker	AN-26-1200
Thumper-Bumper (3)	AN-26-1200
Sling-Shot (2)	AN-26-1200
Drop Target Reset	NO-26-1900
Single Drop Target	AR-26-1200

PLAYFIELD PARTS	See Figure II

MODULES	
Lamp Driver A5	AS-2518-23
Display Driver A1 (5 used)	AS-2518-21
Solenoid Driver/Voltage Regulator A3	AS-2518-22
MPU A4	AS-2962-17
Transformer & Rectifier A2	AS-2877-3
Rectifier Board (Part of A2)	AS-2518-49
Sound	AS-3022-6*
Auxiliary Lamp Driver A9	AS-2518-52

REPAIRS PROCEDURES/AIDS	
Module & Component Replacement	F.O.560-1
AID (Assistance in Diagnostics) Kit, used with F.O.560-1	KIT #485-1

MODULE COMPONENTS
SEE MODULE PARTS LIST

MODULE COMPONENT STARTER KITS
(Each Kit contains an assortment of the most needed electronic parts for use in Module repair.)
Kit #558—For Rectifier Board (Part of A2)
Kit #503—For MPU Board A4 (Less Memory U1-U6)
Kit #492—For Solenoid Driver/Voltage Regulator A3
Kit #493—For Display Driver A1
Kit #494—For Lamp Driver A5
Kit #559—For Sound A8

AS-2518-35 MPU MODULE

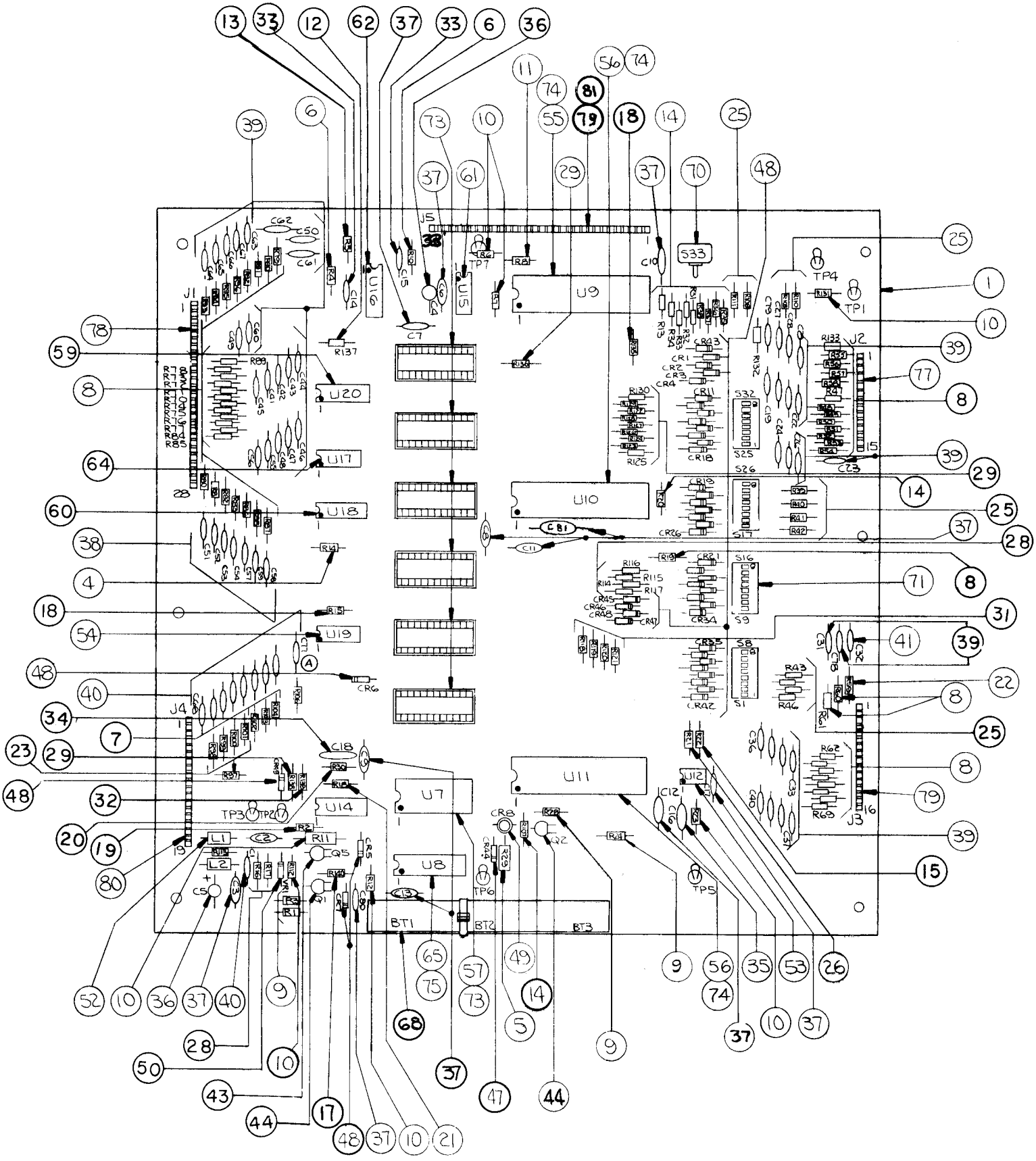

A4: MPU MODULE
COMPONENT PARTS LIST

ITEM	REFERENCE DESIGNATION	BALLY PART #	DESCRIPTION
1	A4 (see note 1)	AS-2962-17	MPU Module Complete. Space Invaders
2	A4 (see note 2)	AS-2518-35	MPU Module less Program Memory, U1-6 incl.
3-32	See Schematic		Resistors, See schematic for value
33	C14, C15	E-00586-0067	Capacitor, 470 PFD, 1kv
34	C18	E-00586-0088	Capacitor, .05 MFD, 16V
35	C16	E-00586-0081	Capacitor, .1 MFD, 100V
36	C4, C5	E-00586-0073	Capacitor, 4.5 MFD, 25V
37	C3, C6-C13, C17, C81	E-00586-0085	Capacitor, .01 MFD, 25V
38	C79, C41-C67	E-00586-0083	Capacitor, 470 PFD, 50V
39	C19-C31, C78, C33-C40	E-00586-0082	Capacitor, 390 PFD, 50V
40	C1, C2, C68-C77	E-00586-0084	Capacitor, 820 PFD, 50V
41	C32	E-00586-0077	Capacitor, 3000 PF, 1kv
43	Q5	E-00585-0023	Transistor PNP (MPS-3702)
44	Q1, Q2	E-00585-0031	Transistor (2N3904)
47	CR44	E-00587-0006	Diode (IN4004)
48	CR1-CR7, CR11-CR43, CR45-CR49	E-00587-0014	Diode (IN4148)
49	CR8	E-00679	LED (Green)
50	VR1	E-00598-0008	Diode Zener (8.2V, IN9598)
52	L1, L2	E-00604-0003	Inductor, 22 Micro Hy.
53	U12	E-00620-0004	Timer (555)
54	U19	E-00620-0005	Quad 2 Input (4011)
55	U9	E-00620-0028	MPU I.C. (6800)
56	U10, U11	E-00620-0029	PIA I.C. (6820)
57	U7	E-00620-0030	RAM I.C. (6810)
59	U20	E-00620-0032	HEX Buffer I.C. (14502B)
60	U14, U18	E-00620-0033	HEX Inverter (4049B)
61	U15	E-00620-0034	Quad Memory Drive (MC3459L)
62	U16	E-00620-0035	Dual Monostable (9602)
64	U17	E-00620-0041	Quad 2 Inputs (74L00N)
65	U8	E-00620-0042	RAM (C MOS, P5101L-3)
68	BT1, BT2, BT3	E-00628-0003	Battery
70	S33	E-00658-0001	Push Button Switch
71	S1-S8, S9-S16, S17-S24, S25-S32	E-00677	DIP Switch
73		E-00712	24 Pin Socket
74		E-00712-0001	40 Pin Socket
75		E-00712-0003	22 Pin Socket
77	J2	E-00715	15 Pin Wafer Connector
78	J1	E-00715-0004	28 Pin Wafer Connector
79	J3, J5	E-00715-0017	16 Pin Wafer Connector
80	J4	E-00715-0018	19 Pin Wafer Connector
81	J5	E-00715-0024	17 Pin Wafer Connector

NOTE 1:
When ordering, fill in dash number. For example, AS-2962-0: LOST WORLD, AS-2962-2: SIX MILLION DOLLAR MAN, AS-2962-3: PLAYBOY, AS-2962-4: VOLTAN, AS-2962-5: SUPERSONIC, AS-2962-6: STAR TREK, AS-2962-7: KISS, AS-2962-8: PARAGON, AS-2962-9: GROUND SHAKER, AS-2962-10 HARLEM GLOBETROTTERS, AS-2962-12: DOLLY PARTON, AS-2062-13: SILVERBALL MANIA, AS-2962-16: ROLLING STONES, AS-2962-17: SPACE INVADERS

NOTE 2: Order replacement memory chips U1-U6, specifying game, socket and part number stamped on chip.

AS-2518-23 LAMP DRIVER MODULE

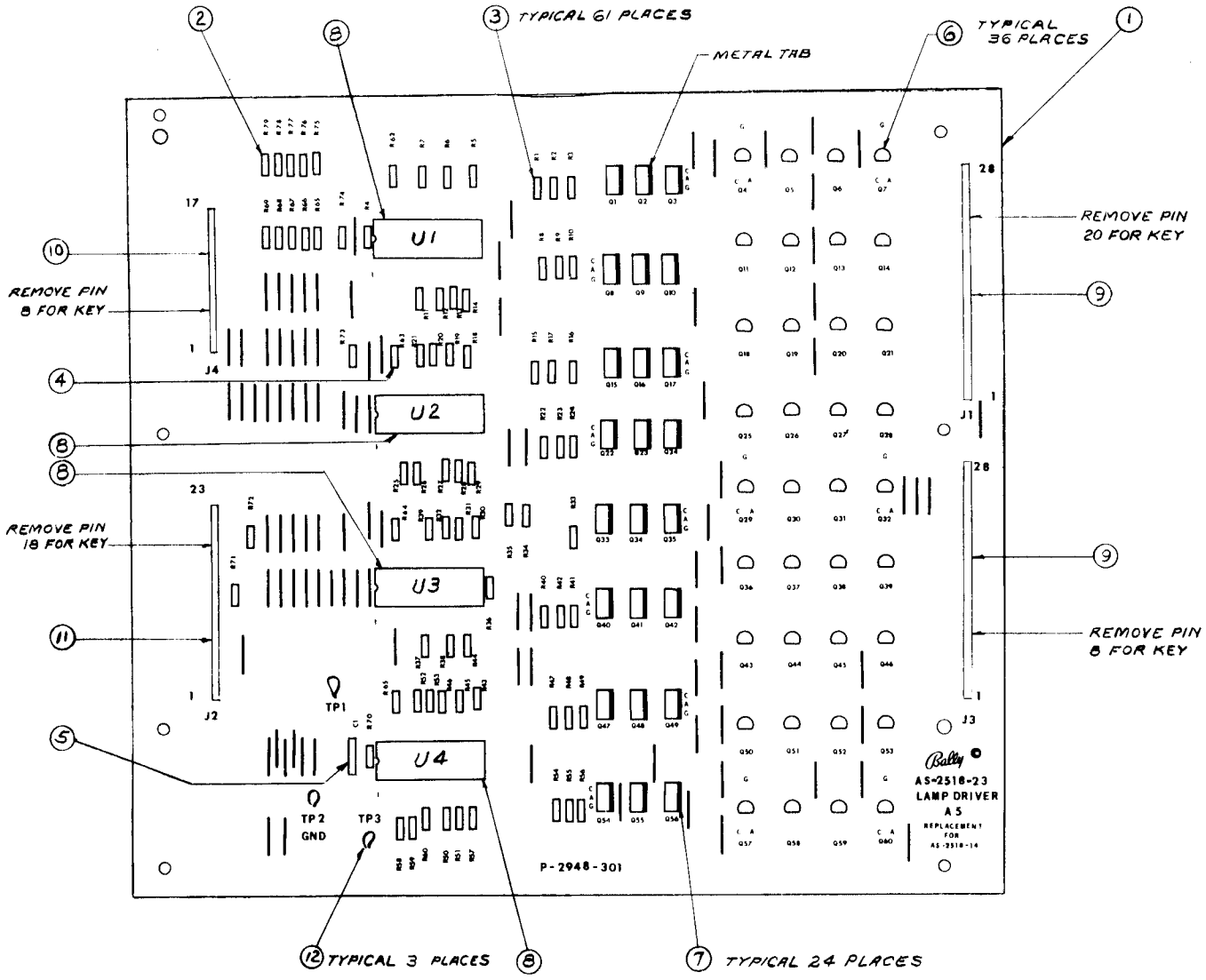

A5: LAMP DRIVER MODULE
COMPONENT PARTS LIST

ITEM	REFERENCE DESIGNATION	BALLY PART #	DESCRIPTION
1	A5	AS-2518-23	Lamp Driver Module, Complete
2	R71-R79	E-00105-242	Resistor, 20kΩ, 5%, ¼ W
3	R1-R60, R70	E-00105-0237	Resistor, 2kΩ, 5%, ¼ W
4	R61-R69	E-00105-0256	Resistor, 2.2MΩ, ¼ W
5	C1	E-00586-0065	Capacitor, .01 MFD, 500V
6	Q4-Q7, Q11-Q14, Q18-Q21, Q25-Q32, Q36-Q39, Q43-Q46, Q50-Q53, Q57-Q60	E-00585-0014	SCR, 2N5060
7	Q1-Q3, Q8-Q10, Q15-Q17, Q22-Q24, Q33-Q35, Q40-Q42, Q47-Q49, Q54-Q56	E-00585-0029	SCR, MCR106-1
8	U1-U4	E-00620-0037	I.C., Decoder, 14514B
9	J1, J3	E-00715-0004	28 Pin Wafer Connector
10	J4	E-00715-0024	17 Pin Wafer Connector
11	J2	E-00715-0014	23 Pin Wafer Connector
12	TP1, TP2, TP3	P-05399	Test Clip

AS-2518-21 DISPLAY DRIVER MODULE

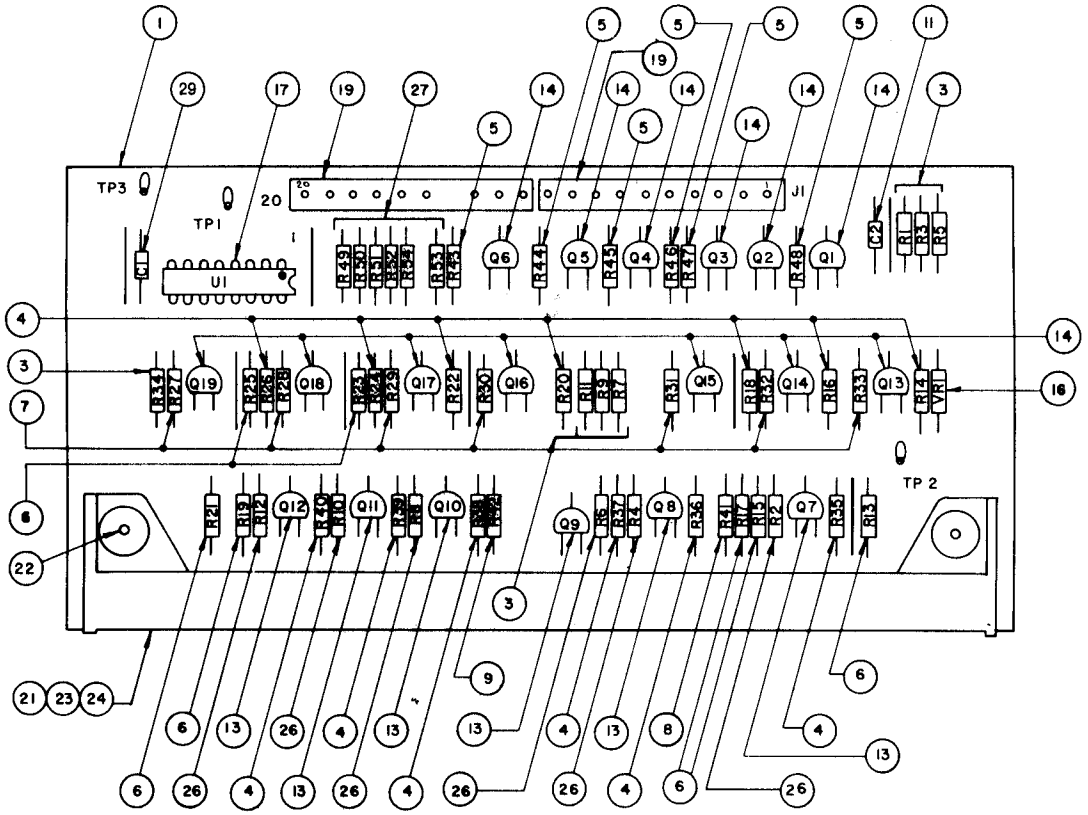

A1: DISPLAY DRIVER MODULE
COMPONENT PARTS LIST

ITEM	QTY.	REFERENCE DESIGNATION	BALLY PART #	DESCRIPTION
1	1		P-2948-296	P.C. Board, M-645-392
3	7	R1, R3, R5, R7, R9, R11, R34	E-105-226	Resistor, 100K Ω
4	13	R14, R16, R18, R20, R22, R24, R26, R35, R36, R37, R38, R39, R40	E-105-227	Resistor, 300K Ω
5	6	R43, R44, R45, R46, R47, R48	E-105-228	Resistor, 9.1K Ω
6	7	R13, R15, R17, R19, R21, R23, R25	E-105-229	Resistor, 1.5K Ω
7	7	R27, R28, R29, R30, R31, R32, R33	E-105-230	Resistor, 1K Ω
8	1	R41	E-105-231	Resistor, 39K Ω
9	1	R42	E-105-271	Resistor, 240K Ω
10				
11	1	C2	E-586-65	Capacitor, .01 MFD, 500V
13	6	Q7, Q8, Q9, Q10, Q11, Q12	E-585-32	Transistor (2N5401)
14	13	Q1, Q2, Q3, Q4, Q5, Q6, Q13, Q14, Q15, Q16, Q17, Q18, Q19	E-585-33	Transistor (MPS-A42)
16	1	VR1	E-598-7	Zener Diode, 110V
17	1	U1	E-620-38	I.C. Decoder
18				
19	2	J1	E-715-34	10 Pin Wafer Pin Connector
21	1	DS1	E-680	Digital Display Panel
22	2		M-1836	Hi-Lo Screw, W/H
23	1		P-2399	Display Mounting (Top)
24	1		P-2399-1	Display Mounting (Bottom)
26	6	R2, R4, R6, R8, R10, R12	E-105-287	Resistor, 2.2K Ω
27	6	R49, R50, R51, R52, R53, R54	E-105-242	Resistor, 20K Ω
28	As Req'd			Wire Jumper
29	1	C1	E-586-85	Capacitor, .01 MFD, 25V

NOTE: INTERCHANGEABLE WITH AS-2518-15

AS-2518-22 SOLENOID DRIVER/VOLTAGE REGULATOR MODULE

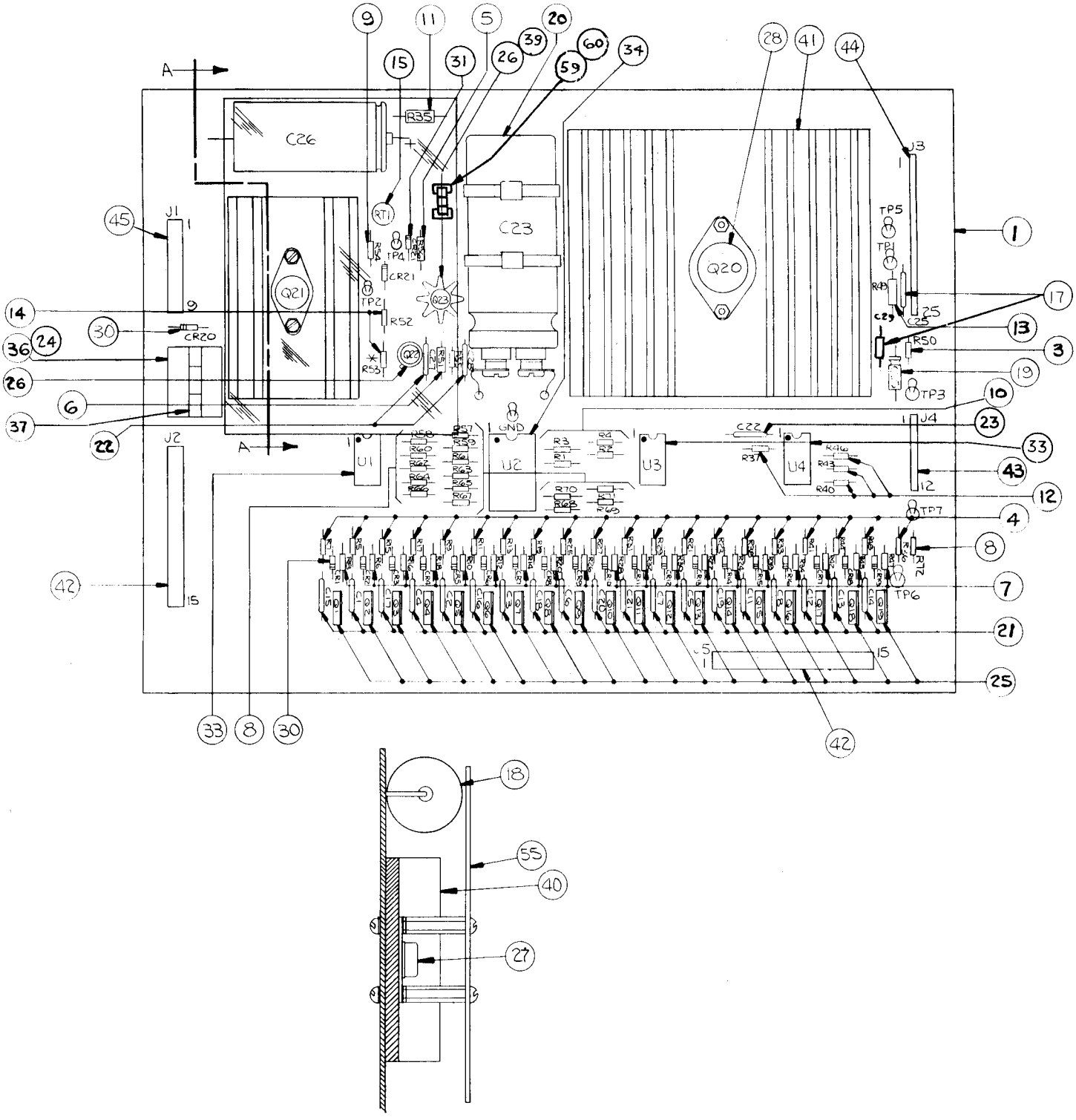

NOTE: INTERCHANGEABLE WITH AS-2518-16

A3: SOLENOID DRIVER/VOLTAGE REGULATOR MODULE

COMPONENT PARTS LIST

ITEM	REFERENCE DESIGNATION	BALLY PART #	DESCRIPTION
1	A3	AS-2518-22	Solenoid Driver/Voltage Regulator Module, Complete
3-14	Resistors		Resistor, See Schematic for value.
15	RT1	E-00599-0014	Pot. (Linear) 25K
17	C25, 29	E-00586-0014	Capacitor, .1 MFD, 20V
18	C26	E-00586-0059	Capacitor, 160 MFD, 350V
19	C24	E-00586-0063	Capacitor, 2 MFD @ 25V
20	C23	E-00586-0062	Capacitor, 11700 MFD, 20V
21	C1-C8, C11-C21	E-00586-0064	Capacitor, .002 MFD, 1kv
22	C27, C28	E-00586-0065	Capacitor, .01 MFD, 500V
24	K1	E-00146-0795	Relay, Printed Circuit
25	Q1-Q19	E-00585-0034	Transistor, SE9302
26	Q22, Q23	E-00585-0041	Transistor, 2N3440
27	Q21	E-00585-0042	Transistor, 2N3584
28	Q20	E-00710	+5V Regulator, LAS1405 or 78H05KC or LM323K
30	CR1-CR21	E-00587-0015	Diode (IN4004)
31	VR1	E-00598-0010	Diode, Zener 140V, IN5275A
33	U1, U3, U4	E-00681	I.C. Transistor Array, CA3081
34	U2	E-00620-0039	I.C. Binary to 1/16 Decoder, 74L154
36		E-00592-0002*	Relay Socket
37		M-1839*	Relay Holder
39		E-00682	Heat Sink, TO5
40		E-00682-0001	Heat Sink, TO66
41		E-00682-0002	Heat Sink, TO3 Case
42		E-00715-0039	15 Pin Wafer Connector
43		E-00715-0016	12 Pin Wafer Connector
44		E-00715-0020	25 Pin Wafer Connector
45		E-00715-0033	9 Pin Wafer Connctor
55		M-1838	Shield-Plexiglass
59		E-00148-0021	Fuse Clips
60	F1	E-00133-0029	Fuse 8 AG-3/16 Amp.
23	C22	E-00586-0085	Capacitor, .01 MFD, 25V

*USED WITH ITEM 24, E-00146-0791, PLUG IN RELAY ONLY

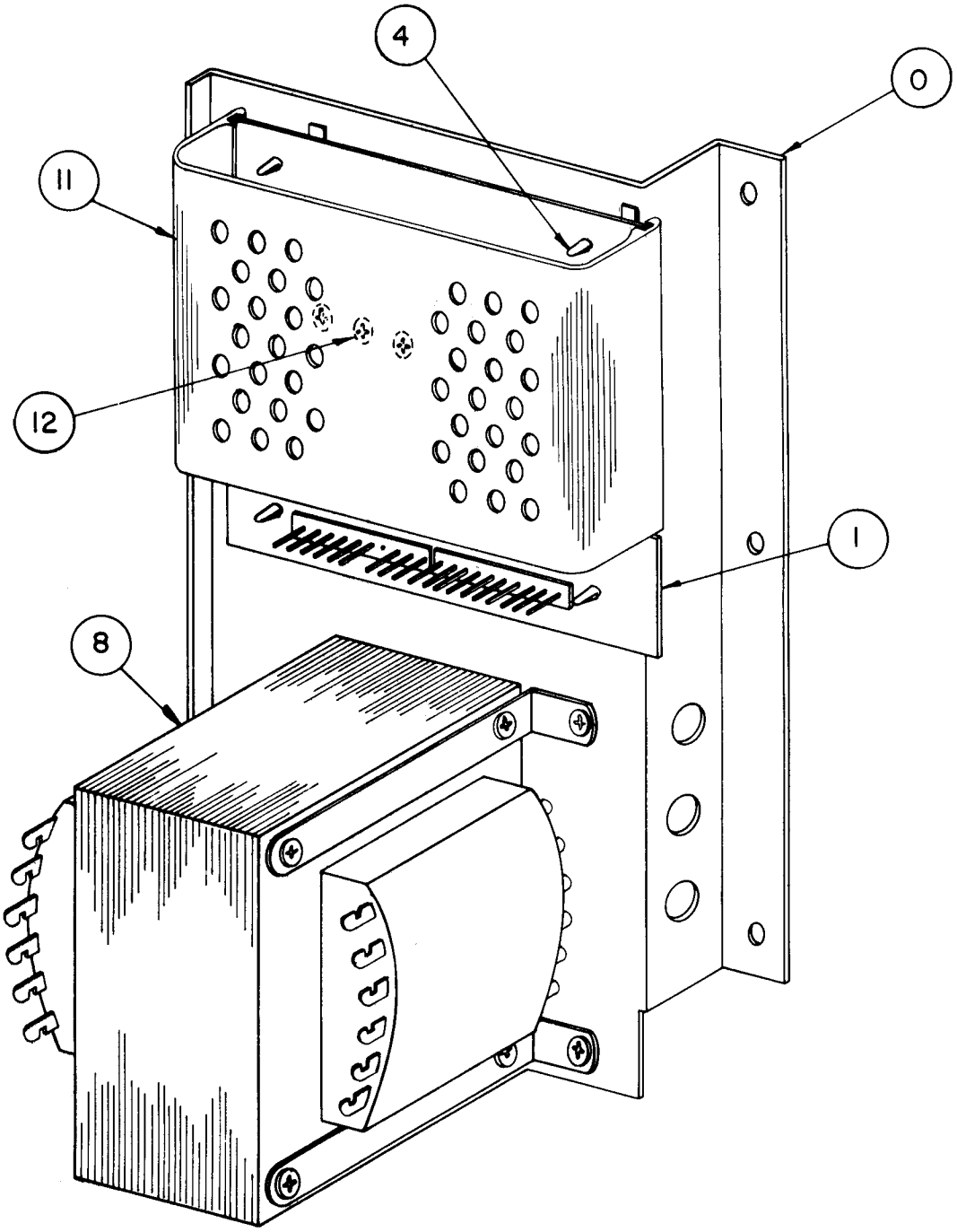

A2: POWER TRANSFORMER MODULE
COMPONENT PARTS LIST

ITEM	REFERENCE DESIGNATION	BALLY PART #	DESCRIPTION
0	A2	AS-2877-3	Power Transformer Module, Complete
1		AS-2518-49	Rectifier Board Assembly
4		M-1829-2a	Circuit Board Support (4 Req'd.)
8		E-00122-0131C	Transformer 120/240V, 50/60 Hz
11		P-2692-1b	P.C.B Cover
12		M-1834	Heat Sink Compound

AS-2518-49 RECTIFIER BOARD ASSEMBLY

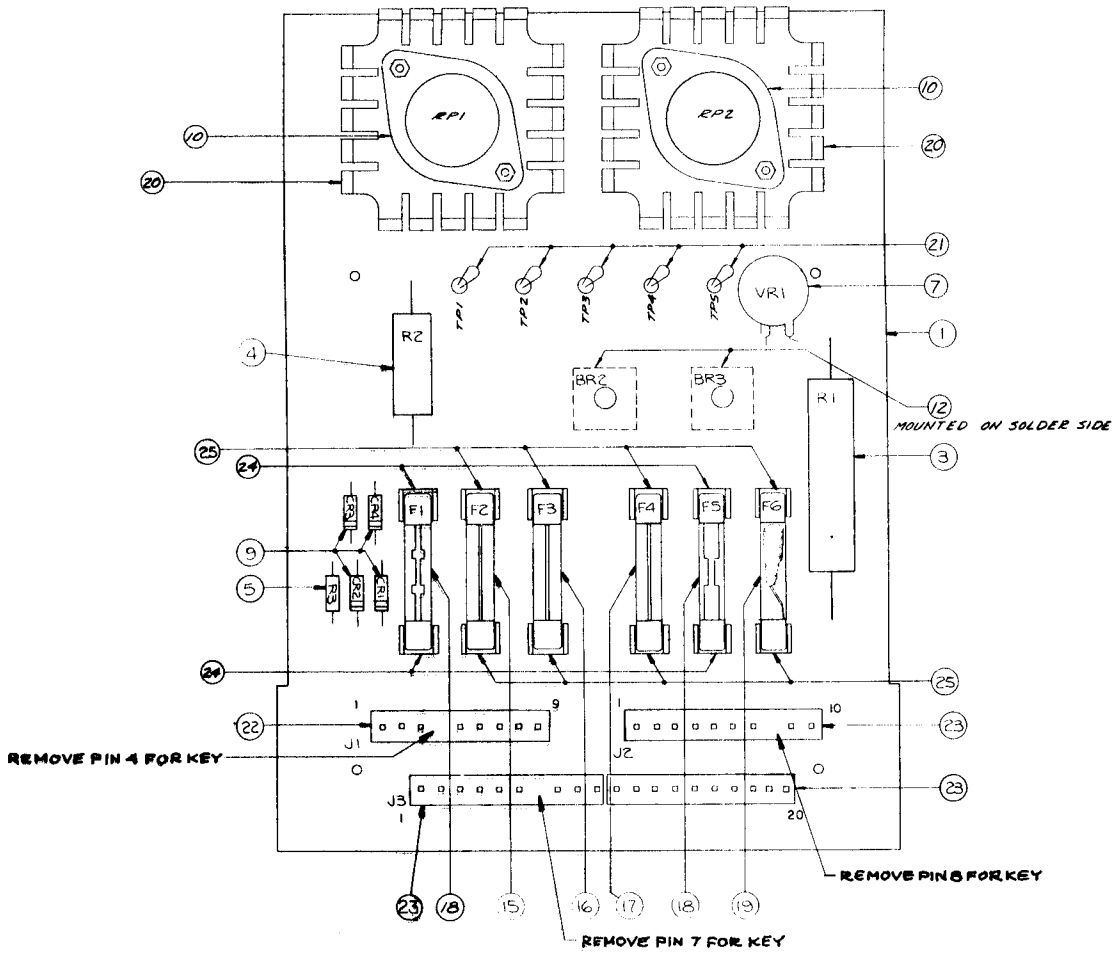

RECTIFIER BOARD ASSEMBLY
(Part of)
A2: POWER TRANSFORMER MODULE
COMPONENT PARTS LIST

ITEM	REFERENCE DESIGNATION	BALLY PART #	DESCRIPTION
1	P/O A2	AS-2518-49	Rectifier Board Assembly, Complete
3	R1	E-00104-0092	Resistor, 10%, 600 Ohm, 10W
4	R2	E-00104-0091	Resistor, 25 Ohm, 5W
5	R3	E-00105-0226	Resistor, 5%, 100K Ohm, ¼W
7	VR1	E-00623	Varistor
9	CR1, CR2, CR3, CR4	E-00587-0006	Diode (IN4004)
10	RP1, RP2	E-00602-0004	Rectifier Package (R712E, VARO)
12	BR2, BR3	E-00602-0003	Bridge Rectifier (VJ248 VARO)
15	F2	E-00133-0028	Fuse, ¾A, 250V, 3AG, S.B.
16	F3	E-00133-0004	Fuse, 4A, 32V, 3AG
17	F4	E-00133-0005	Fuse, 5A, 32V, 3AG
18	F1, F5	E-00133-0027	Fuse, 20A, 32V, 3AG
19	F6 (SEE NOTE 1)	E-00133-0024	Fuse, 3A, 125V, 3AG, S.B.
20	FOR RP1, RP2	E-00682-0011	Heatsink, 6053B
21	TP 1, 2, 3, 4, 5	P-05399	Test Point
22	J1	E-00715-0033	9 Pin Wafer Connector
23	J2, J3	E-00715-0034	10 Pin Wafer Connector
24	F1, F5	E-00148-0022	Fuse Clips
25	F 2, 3, 4, 6	E-00148-0021	Fuse Clips

NOTE 1-SPACE INVADERS USE E-00133-0032 FUSE, 5A, 250V, 3A6, S.B.

A8: SOUND MODULE
COMPONENT PARTS LIST

ITEM	REFERENCE DESIGNATION	BALLY PART NO.	DESCRIPTION
1	A8 (see note 1)	AS-3022-6	PWB Module Complete
2	U1	E-620-124	Sound Chip AY-3-8910
3	U2	E-620-29	PIA, 6820/21
4	U3	E-620-125 (E620-128)	CPU, 6808 (6802 Note 3)
5	U10	E-620-30	Ram, 6810 (Note 3)
6	U5	E-620-33	Hex Inverter 4049B
7	U6	E-620-5	Quad 2 Input 4011B
8	U8	E-620-126	Amp, LM3900
9	U9	E-620-127	Power Amp, TDA 2002
10	Q1	E-585-31	Transistor, 2N3904
11	CR1, 2	E-587-6	Diode, 1N4004
12	SW1	E-658-1	Switch
13	C12	E-586-118	Cap. .2MF ±20% Y5P, 16 V.
14	C2	E-586-130	Cap. .47 ±20%
15	C16	E-586-83	Cap. 470 PF 50 V.
16	C3	E-586-120	Cap. 68 PF, ±20% 1K
17	C18, 19	E-586-121	Cap. 27 PF, ±20% 1K
18	Y1	E-744-5	Crystal, 3.579545 MHZ
19	J2	E-736-2	Connector, Wafer, 2 Pin KK156
20	J1	E-736-15	Connector, Wafer, 15 Pin KK156
21	R9	E-105-196	Resistor, 1 Ohm, ¼ W., 5%
22	R8	E-105-211	Resistor, 2.2 Ohm, ¼ W., 5%
23	R7	E-105-303	Resistor, 220 Ohm, ¼ W., 5%
24	R1	E-105-230	Resistor, 1 K, ¼ W., 5%
25	R21, 22, 23, 24	E-105-238	Resistor, 3.3K. Ohm, ¼ W., 5%
26	R6	E-105-239	Resistor, 4.7K., ¼ W., 5%
27	R3, 14, 15, 16, 17, 18, 19, 25	E-105-185	Resistor, 10K., ¼ W., 5%
28	R2	E-105-245	Resistor, 30K., ¼ W., 5%
29	R10	E-105-252	Resistor, 180K., ¼ W., 5%
30	R4	E-105-225	Resistor, 200K., ¼ W., 5%
31	R5, 20	E-105-285	Resistor, 1M, ¼ W., 5%
32	RT1	E-599-16	Potentiometer 1K
33	C23	E-586-122	Cap. .001 ±20% 2SF
34	C15	E-586-123	Cap. 4700 MF @ 25 V.
35	C7	E-586-124	Cap. 470 MF @ 6.3 V
36	C8	E-586-129	Cap. 470 MF @ 16 V.
37	C5, 13	E-586-90	Cap. 1 MF @ 50 V.
38	C9, 1, 14, 6	E-586-89	Cap. .1 MF
39	C4, 22, 17, 21, 20, 24	E-586-85	Cap. .01 MF
40	XU10, XU4	E-712	Socket, 24 Pin
41	XU1, XU2, XU3	E-712-1	Socket, 40 Pin
42	Used with 43	LSPR-00632-1106	Bolt, 6 x 32 x 3/8
43	Used with 42	N-00632-2112	Nut, 6 x 32
44	H.S for U9	E-682-8	Heat Sink, 6030BTT
45	Used with C15	E-647-5	Ty Rap
46	TP1, 2, 3, 4, 5, 6	P-5399	Test Point
47	Use with 44, 9	M-1834	Thermal Grease
48	Jumper, B		22 AWG Wire, Solid Tinned
		W-1211c	Schematic

NOTE 1: When ordering specify name of game.

NOTE 2: Order replacement memory chip U4 specifying name of game and part no. stamped on chip.

NOTE 3: When using item 4, 6808 you must use item 5, 6810 and the "B" jumper. When item, 6802 is available delete item 5 and use "A" jumper.

AS-2518-51 SOUND MODULE

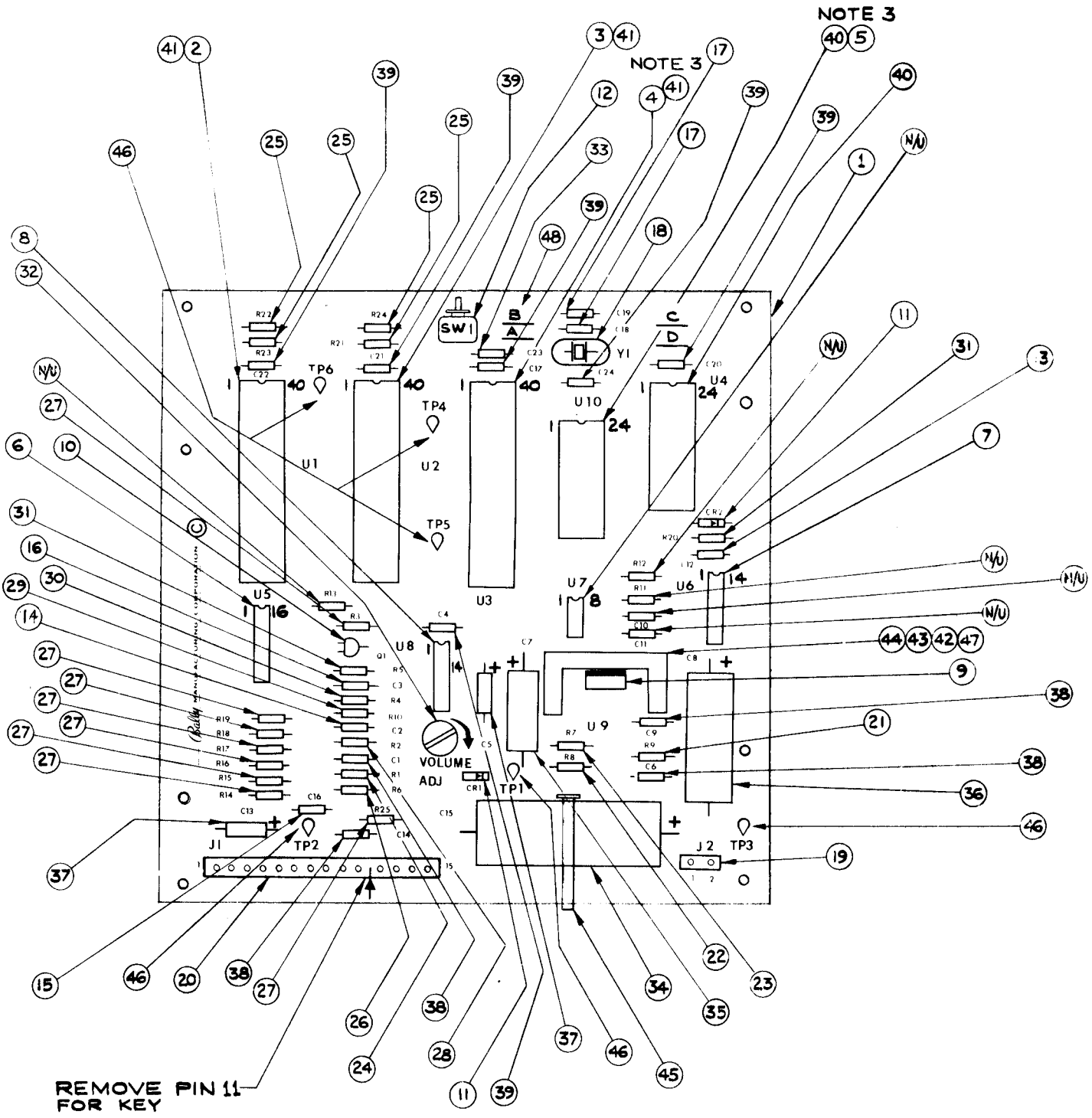

AS-2518-52 AUXILIARY LAMP DRIVER

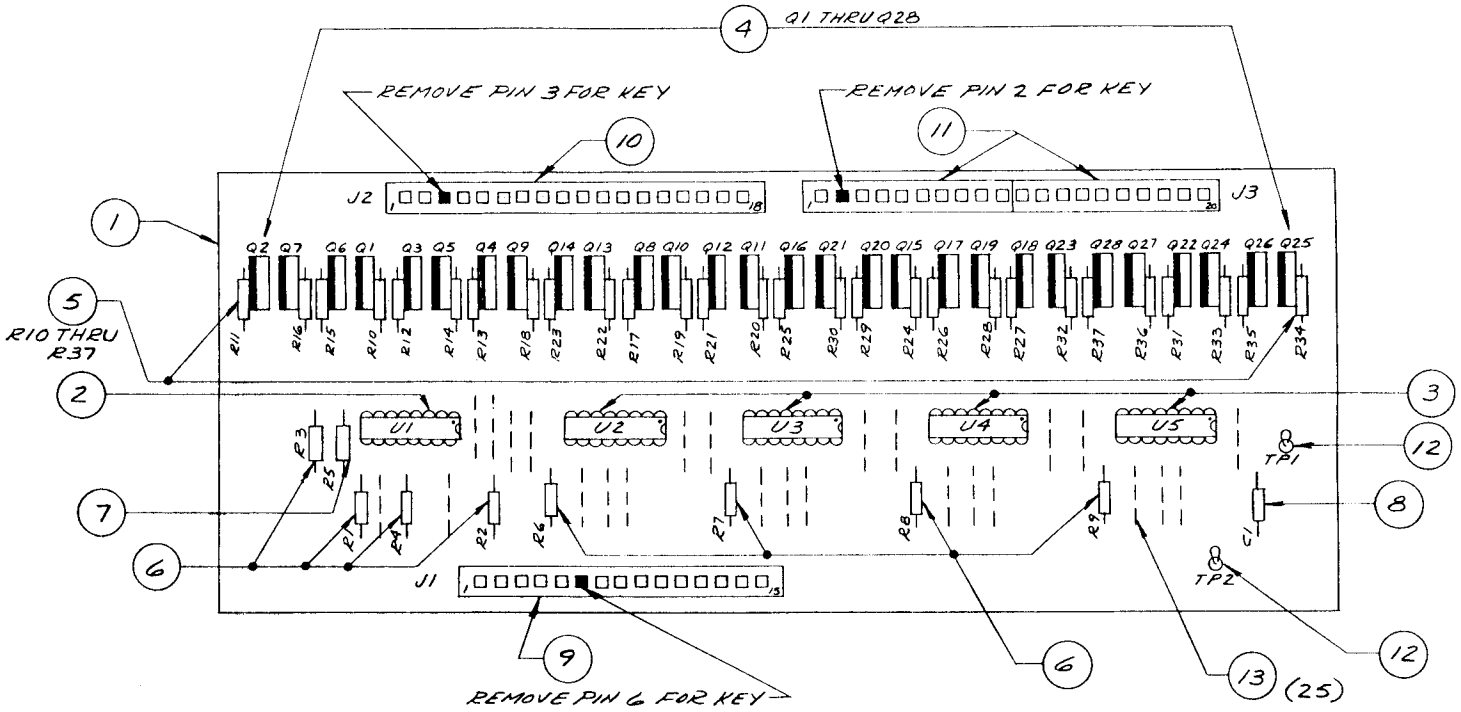

A9: AUXILIARY LAMP DRIVER
COMPONENT PARTS LIST

ITEM	QTY.	REFERENCE DESIGNATION	BALLY PART NO.	DESCRIPTION
1	1		P-2948-504	P.C.B. (M-645-512)
2	1	U1	E-620-134	Quad Flip Flop
3	4	U2 Thru U5	E-620-108	BCD to Decimal Decoder
4	28	Q1 Thru Q28	E-585-29	S.C.R.
5	28	R10 Thru R37	E-105-237	Resistor , 2K Ω, ¼ W, 5%
6	8	R1-4, R6-9	E-105-242	Resistor, 20K Ω, ¼ W, 5%
7	1	R5	E-105-173	Resistor, 2.2M, ¼ W, 5%
8	1	C1	E-586-85	Capacitor, .01μf, 25V, ±20 %
9	1	J1	E-736-15	Connector, KK156 15 Pin
10	1	J2	E-736-18	Connector, KK156 18 Pin
11	2	J3	E-736-10	Connector, KK156 10 Pin
12	2	TP1, TP2	P-5399	Test Point
13	25		M-1777-126	Jumper

ATTACHMENT II: INSTRUCTION MANUAL

Female insulation displacement connectors are used in the backbox cable harnesses. These connectors can be identified by the side entry of the leads and by their black, plastic covers.

The mating, white, male connectors on the Sound, Solenoid Driver and Transformer modules have .156" center to center spacing. Two pin lengths are in use. This, and all current games have a .450" length. Older games have a .640" length.

During servicing, when mating insulation displacement connectors on male connectors with a .640" pin length:

1. Hold the female connector parallel to the module surface.
2. Carefully align the openings in the female with the male pins.
3. Mate the connector set firmly but gently while maintaining the parallel relationship.
4. As resistance is encountered, stop applying force. An air gap of about .150" between the male and female connector bodies is normal at complete engagement.

CAUTION: It is not necessary or advisable to force the female connector further onto the male pins. Doing so may cause an intermittent connection.

When mating insulation displacement connectors on male connectors with a .450" pin length:

1. Follow steps 1-4 above, but—
2. Disregard the **CAUTION** note. Also, no air gap exists between the connector pair on total engagement.

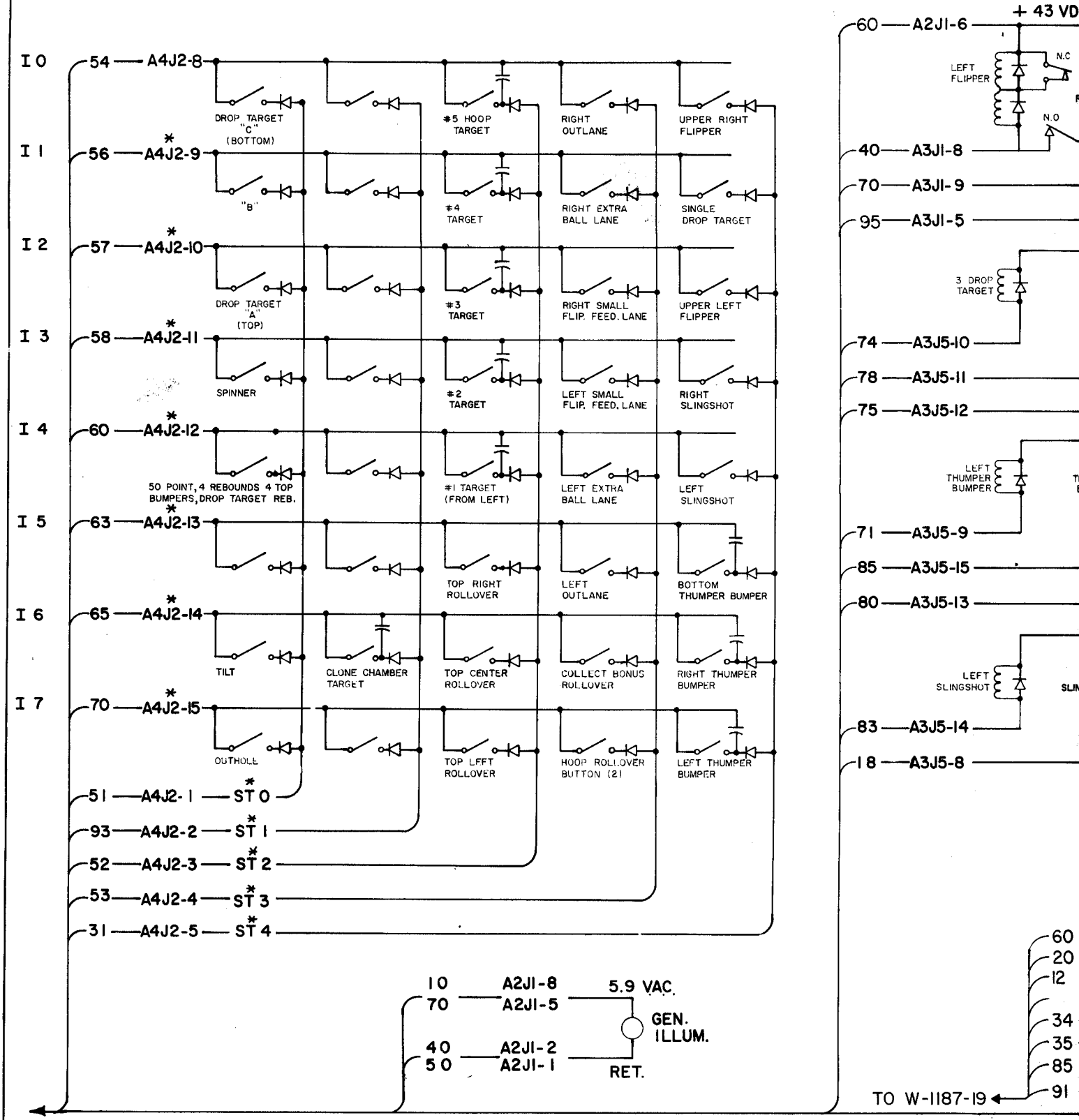

PLAYFIELD A6

NOTES

1. INDICATES NOT USED
2. N/U = NOT USED ON PLAYFIELD
3. * INDICATES AID TEST POINT
4. **COIL** DIODES ARE IN4004, (E-587-6), **SWITCH DIODES ARE** ALL CAPACITORS ARE .05 MFD. (E-586-80)

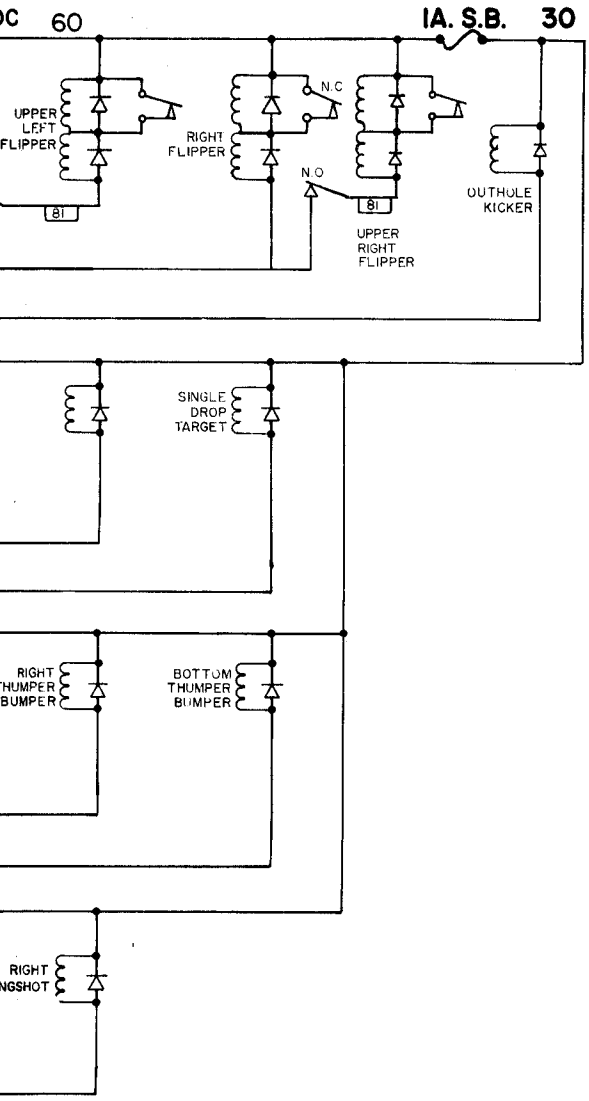

5.4 VDC

58 — A5J1-18 1K BONUS
60 — A5J1-19 5K BONUS
57 — A5J1-17 9K BONUS
56 — A5J1-23 2X HOOP
54 — A5J1-14 20K (1-5)
13 — A5J1-15 25K HOOP
12 — A5J1-16 #1 TARGET (FROM LEFT)
78 — A5J1-28 #5 HOOP TARGET
50 — A5J1-24 10K CLONE CHAMBER
90 — A5J1-25 50K CLONE CHAMBER
91 — A5J1-26 N/U
53 — A5J1-27 5K HOOP
41 — A5J1-1 2K BONUS
52 — A5J1-9 6K BONUS
51 — A5J1-8 10K BONUS
45 — A5J1-3 3X HOOP, 2X BONUS
43 — A5J1-2 40K (1-5)
23 — A5J1-10 TOP LEFT ROLLOVER
34 — A5J1-7 #2 TARGET
25 — A5J1-6 BONUS INCREASE 50,000 ARROW
48 — A5J1-5 20K CLONE CHAMBER
65 — A5J1-11 TARGET INCREASE 50,000 ARROW
35 — A5J1-4 N/U
61 — A5J1-12 SPECIAL RIGHT HOOP
96 — A5J1-13 RIGHT SMALL FLIP. FEED. LANE

38 — A5J3-26 3K BONUS
36 — A5J3-25 7K BONUS
67 — A5J3-19 20K BONUS
27 — A5J3-17 4X HOOP, 3X BONUS
25 — A5J3-16 60K (1-5)
98 — A5J3-23 TOP CENTER ROLLOVER
40 — A5J3-27 #3 TARGET
30 — A5J3-21 30K CLONE CHAMBER
64 — A5J3-20 #5 TARGET ARROW
23 — A5J3-22 S.P. SHOOTS AGAIN
72 — A5J3-24 SPECIAL LEFT HOOP
10 — A5J3-1 4K BONUS
21 — A5J3-12 8K BONUS
53 — A5J3-15 5X BONUS
20 — A5J3-11 5X HOOP, 4X BONUS
15 — A5J3-9 SPECIAL (1-5)
13 — A5J3-13 CREDIT INDICATOR
14 — A5J3-4 #4 TARGET
95 — A5J3-2 LEFT SMALL FLIP. FEED. LANE
91 — A5J3-10 40K CLONE CHAMBER
56 — A5J3-18 TOP CLONE CHAMBER
81 — A5J3-3 TOP RIGHT ROLLOVER
84 — A5J3-14 SPINNER 1000
20 — A2J1-7 FEATURE LAMP BUS

A5J2-1 LEFT X-BALL LANE
A5J2-2 RIGHT X-BALL LANE
A5J2-14 SPECIAL DROP TARGET
A5J2-16 10K DROP TARGET
A5J2-20 15K DROP TARGET
A5J2-6 20K DROP TARGET
A5J2-7 25K DROP TARGET

IN 4148, (E-587-14)

ALL DESIGN, OPERATIVE AND PROCESS DATA PERTAINING TO THE ARTICLE SHOWN ON THIS SHEET IS THE PROPERTY OF BALLY MFG. CORP., CHICAGO, ILL. THIS INFORMATION IS DISCLOSED IN CONFIDENCE AND IS NOT TO BE COPIED, REPRODUCED, REVEALED TO OR APPROPRIATED BY OTHERS, IN PART OR IN WHOLE, WITHOUT THE EXPRESS CONSENT OF THE OWNERS. THE PRINT IS LOANED AND MUST NOT BE USED IN ANY MANNER DETRIMENTAL TO THE INTEREST OF THE OWNERS, AND MUST BE RETURNED ON DEMAND.

DR. BY E.V.	DATE 2-1-80
CK. BY	DATE 2-1-80
AP'D BY	DATE 2-1-80
AP'D BY	DATE 2-1-80
FINISH:	
HARDENING:	

Bally MANUFACTURING CORP.
2640 BELMONT AVENUE
CHICAGO, ILLINOIS 1178

PRINT CONTROL | TOTAL | SCALE

NAME: SWITCH MATRIX
ASSEM. NO. USED ON/W
MATERIAL: SPACE INVADERS
PART NO. W-1192-19c

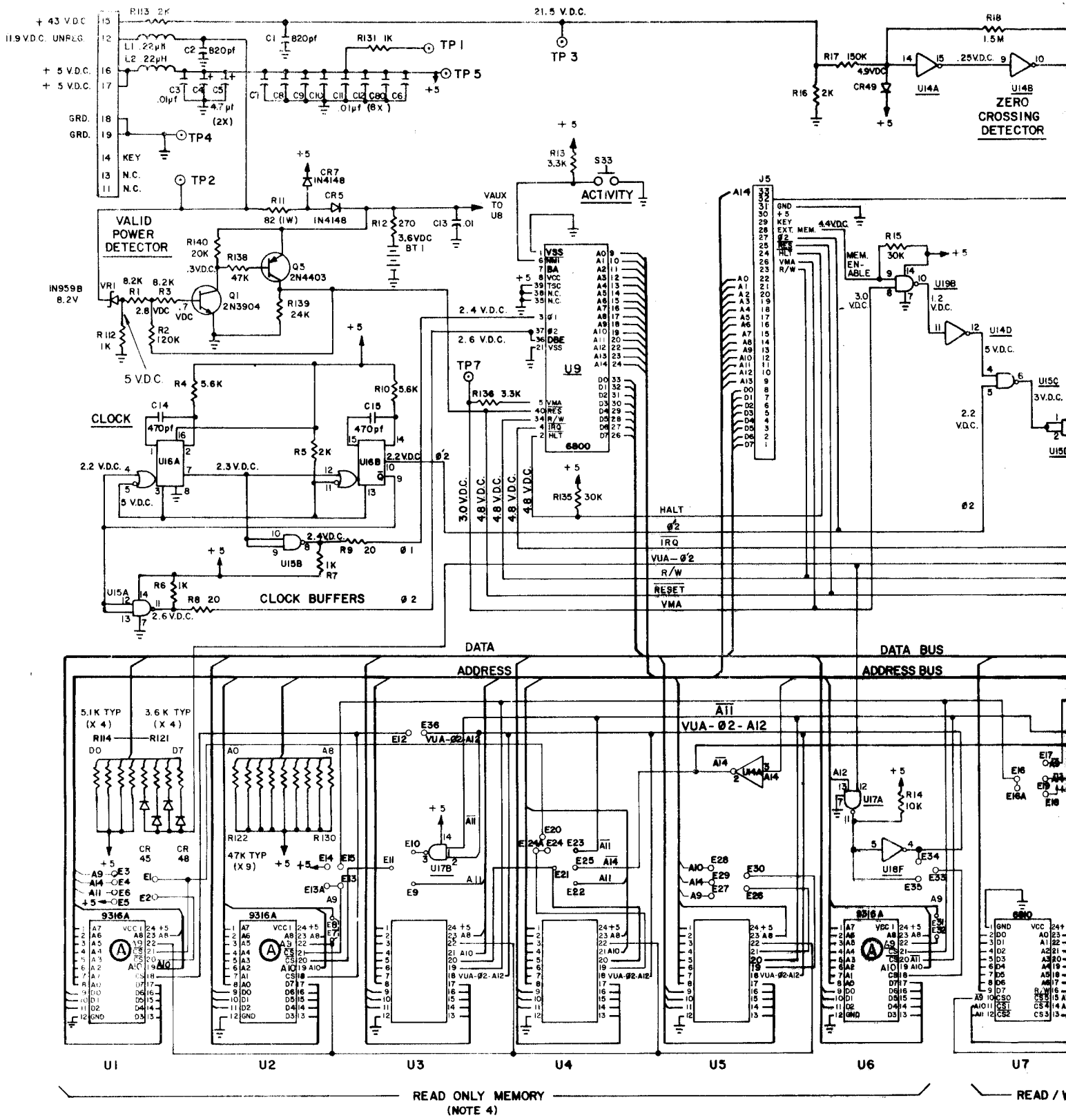

NOTES

1. ✳ INDICATES "AID" TEST POINT.
2. REMOVE A3J4 BEFORE USING AS AID TEST POINT
3. PREFIX ALL REFERENCE DESIGNATIONS WITH "A4"
4. EXACT CHIP COMPLEMENT USED IN SOCKETS U1 THRU U6 CAN VARY FOR DIFFERENT GAMES AND PRODUCTION LOTS. TABLES OF MEMORY CHIPS AND CORRESPONDING JUMPERS FOR DIFFERENT GAMES AVAILABLE FROM BALLY FIELD SERVICE DEPARTMENT.

W-1181-3c

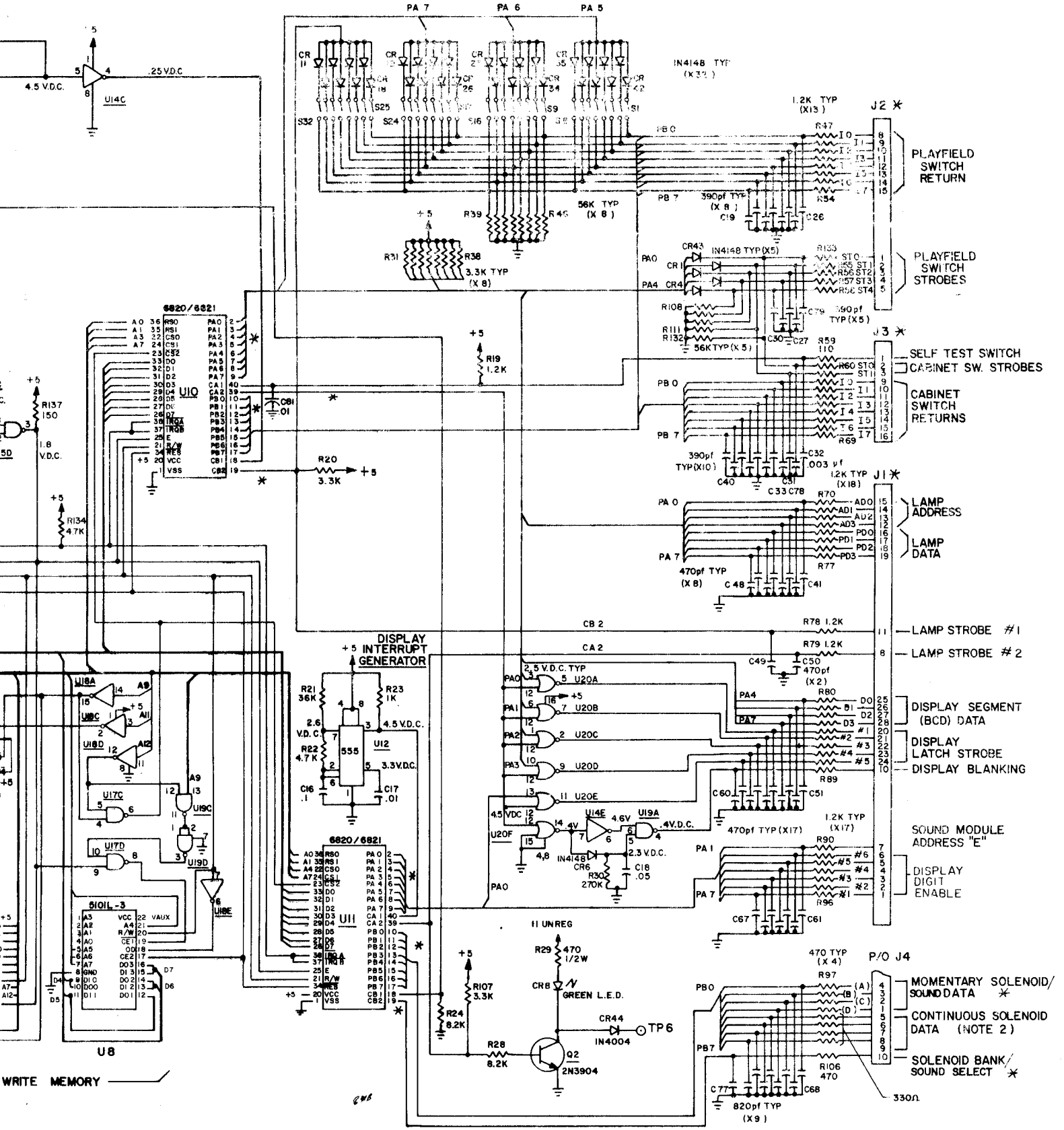

ALL DESIGN, OPERATIVE AND PROCESS DATA PERTAINING TO THE ARTICLE SHOWN ON THIS SHEET IS THE PROPERTY OF BALLY MFG. CORP., CHICAGO, ILL. THIS INFORMATION IS DISCLOSED IN CONFIDENCE AND IS NOT TO BE COPIED, REPRODUCED, REVEALED TO OR APPROPRIATED BY OTHERS IN PART OR IN WHOLE WITHOUT THE EXPRESS CONSENT OF THE OWNERS. THE PRINT IS LOANED AND MUST NOT BE USED IN ANY MANNER DETRIMENTAL TO THE INTEREST OF THE OWNERS, AND MUST BE RETURNED ON DEMAND.

No.	LET.	CHANGE	DATE	BY	CK.
1	A	A0 was VCC2 on U1, U2, U3 A10 was CS			

REMOVE ALL BURRS

TOLERANCES ON DIMENSIONS UNLESS OTHERWISE SPECIFIED
FRACTIONS ± 1/64
DECIMALS ± .005
ANGLES ± 1°

DO NOT SCALE DRAWING

DR. BY	E V	DATE 5-11-78
CK. BY	[illegible]	DATE 5-15-78
APP'D BY		DATE
APP'D BY		DATE
FINISH		
HARDENING		

Bally MANUFACTURING CORP.
2640 BELMONT AVENUE
CHICAGO, ILLINOIS

1119-E

PRINT CONTROL									TOTAL	SCALE
→										

NAME: M.P.U. CONTROL BOARD SCHEMATIC

ASSEM. NO. USED ON

MATERIAL

PART NO. W-1181-3c

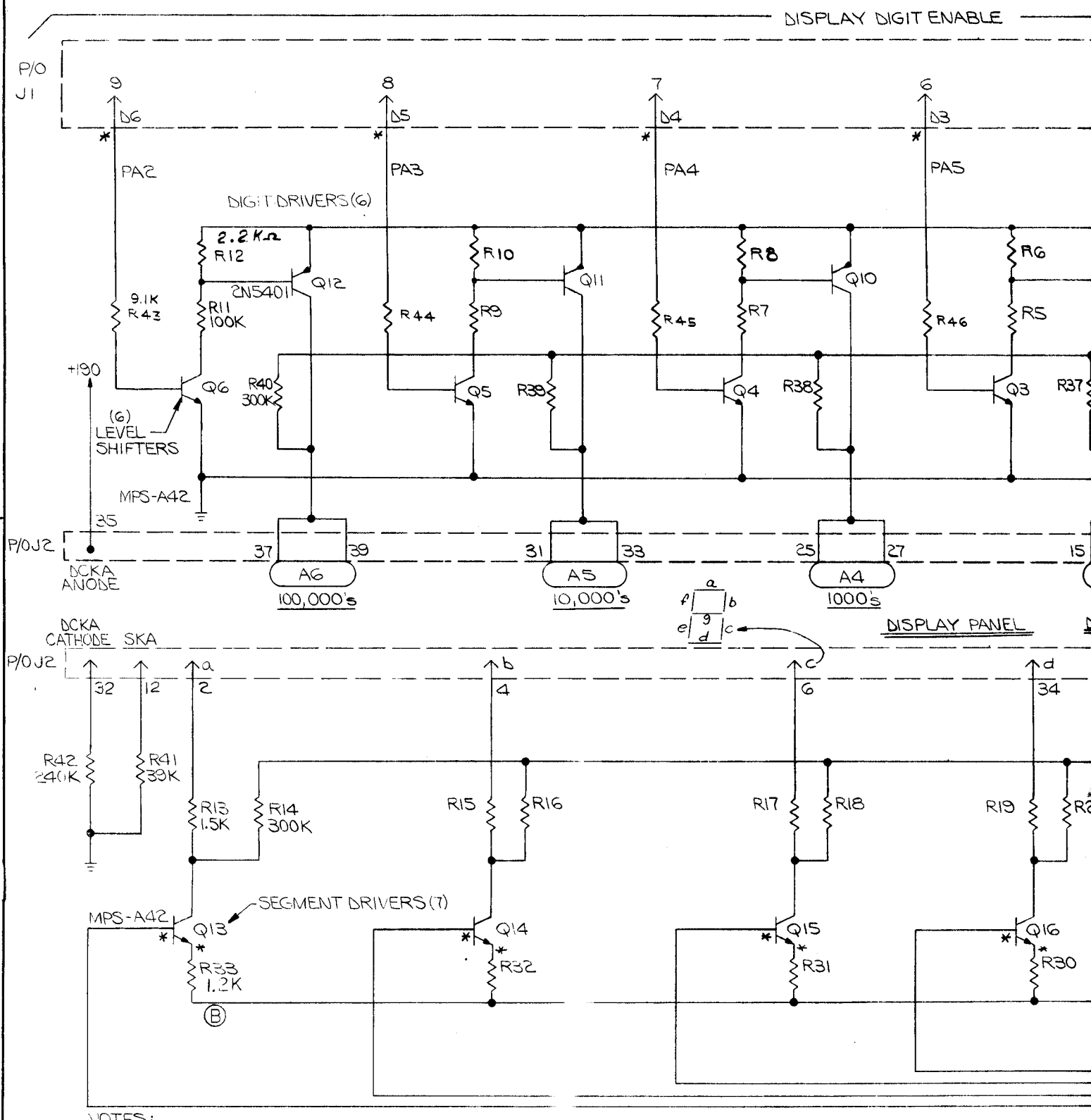

NOTES:

1. UNLESS OTHERWISE SPECIFIED ALL RESISTORS ARE ± 5%, 1/4W.
2. PREFIX ALL REFERENCE DESIG. WITH ASSEMBLY REFERENCE DESIG. "A1"
3. * INDICATES 'A1D' TEST POINT.

OPER.	DEPT.	DESCRIPTION	TOOL No.

DIETZGEN 196H

G PART NO. W-1184-1c

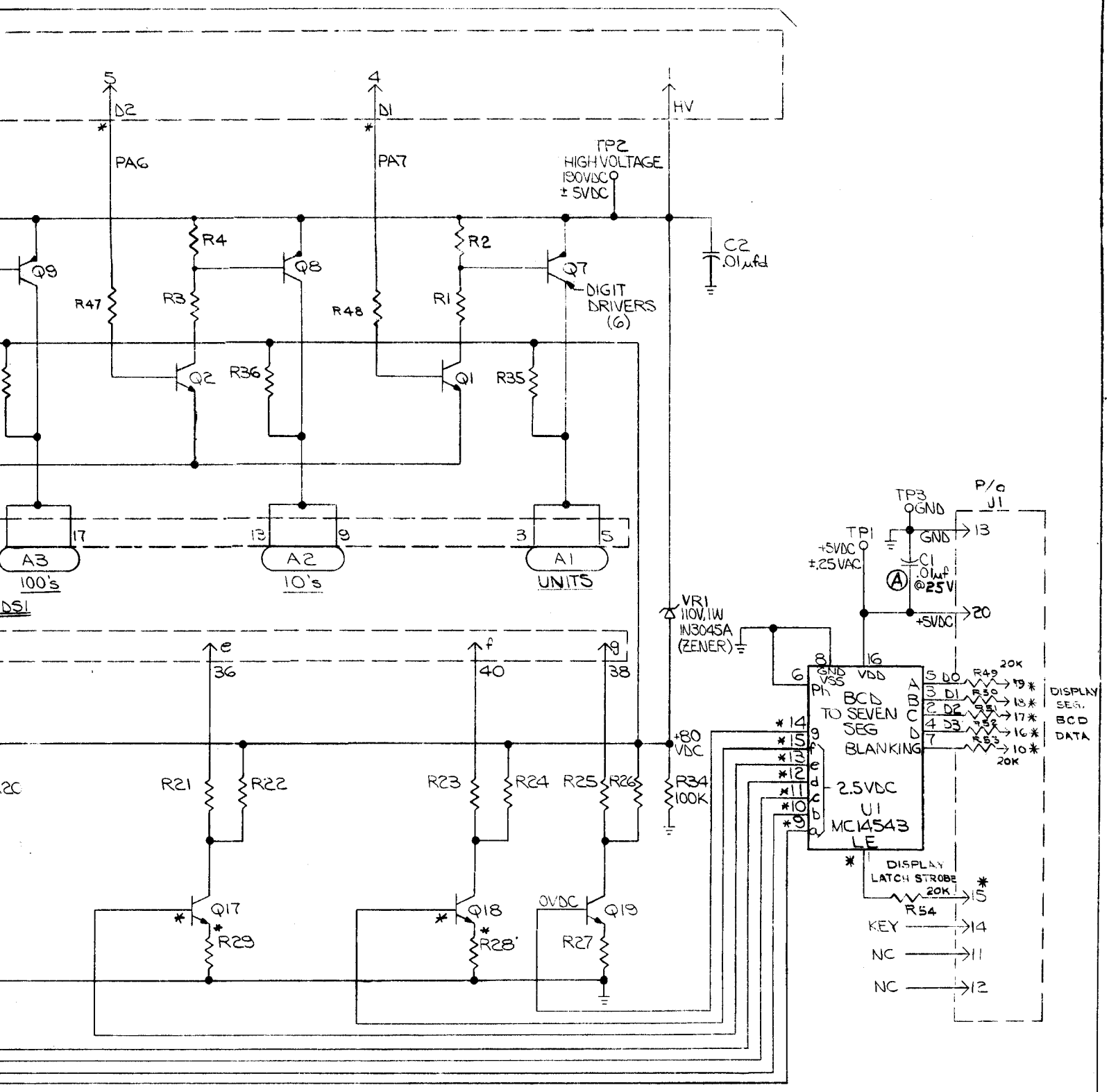

DIE SIZE — C.C. — FT. PER M — LBS. PER M —

ALL DESIGN, OPERATIVE AND PROCESS DATA PERTAINING TO THE ARTICLE SHOWN ON THIS SHEET IS THE PROPERTY OF BALLY MFG. CORP., CHICAGO, ILL. THIS INFORMATION IS DISCLOSED IN CONFIDENCE AND IS NOT TO BE COPIED, REPRODUCED, REVEALED TO OR APPROPRIATED BY OTHERS, IN PART OR IN WHOLE, WITHOUT THE EXPRESS CONSENT OF THE OWNERS. THE PRINT IS LOANED AND MUST NOT BE USED IN ANY MANNER DETRIMENTAL TO THE INTEREST OF THE OWNERS, AND MUST BE RETURNED ON DEMAND.

REMOVE ALL BURRS

TOLERANCES ON DIMENSIONS UNLESS OTHERWISE SPECIFIED
FRACTIONS ±
DECIMALS ±
ANGLES ±

DO NOT SCALE DRAWING

NO.	LET.	CHANGE	DATE	BY	CK.
2	B	WAS 1K	3-28-80		J.D.
1	A	WAS 500 V	4-16-79		J.D.

DR. BY DG DATE 2227
CK. BY DATE
APP'D BY DATE 10/14/77
APP'D BY DATE 10/14/77
FINISH:
HARDENING:

Bally MANUFACTURING CORP. #1120-E
2640 BELMONT AVENUE
CHICAGO, ILLINOIS
NOV 10 1977
P.C. M. VEETICS

PRINT CONTROL	ENGR. CONT.	PUR. DEPT.	ENG. FILE	TOOL DESIGN	CONT. DEPT.	MFG. ENGR.	TEST ENGR.	MAINT. ENGR.		TOTAL	SCALE
→											N

NAME DISPLAY BOARD SCHEMATIC "A"
ASSEM. NO. USED ON/W AS-2518-21
MATERIAL
PART NO. W-1184-1c

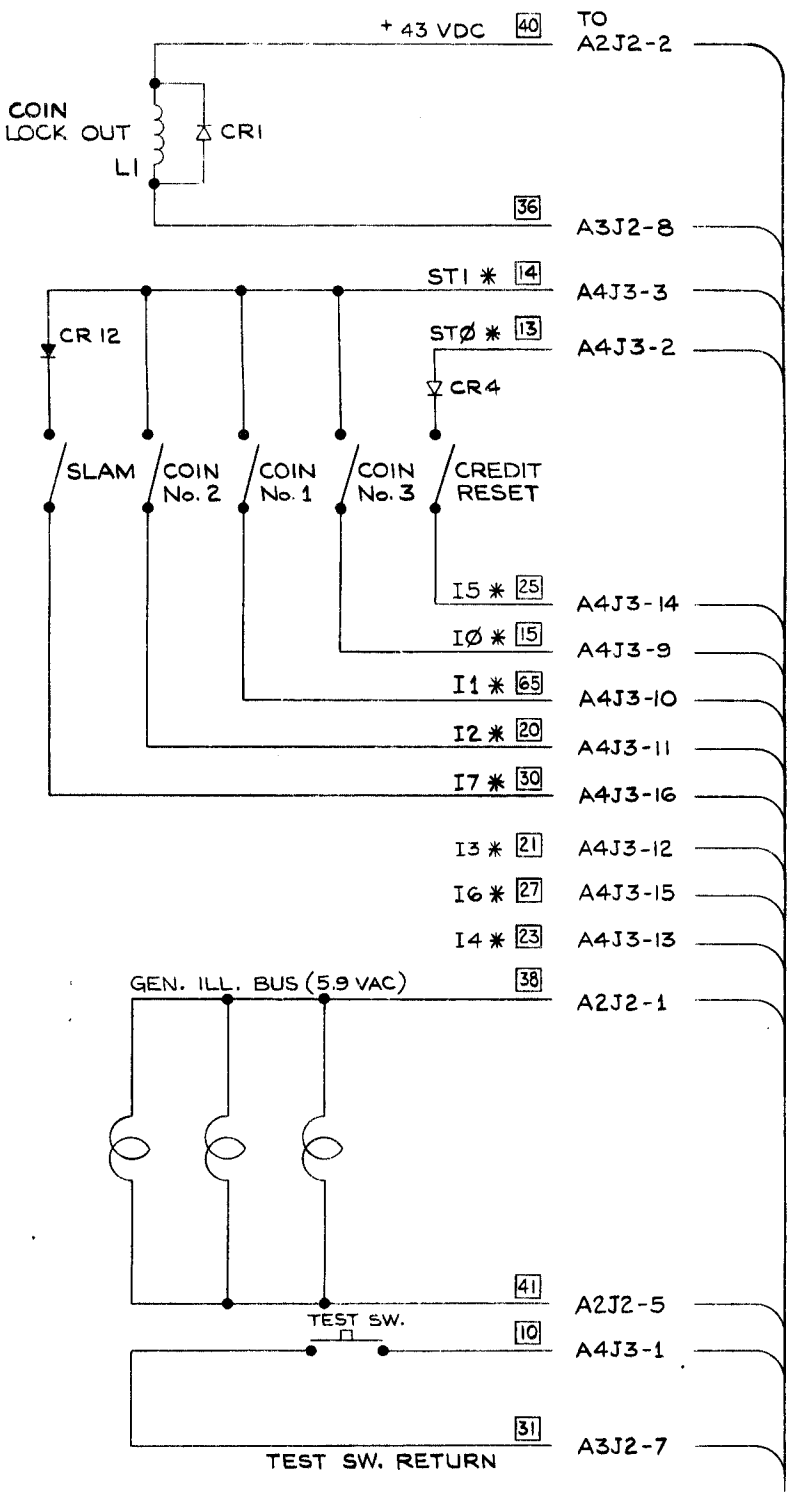

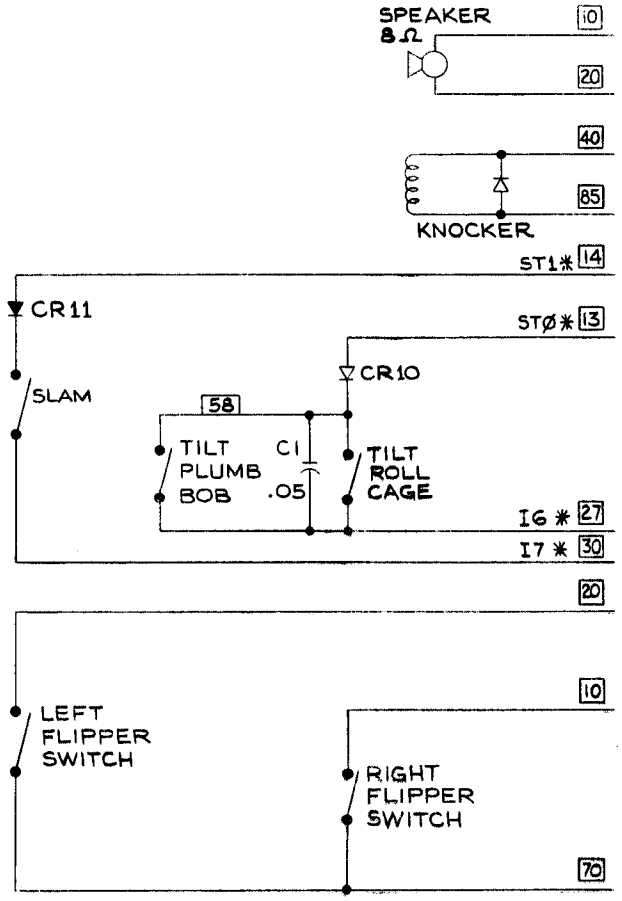

P1

J1

TO	J1 PIN	TO	J1 PIN
A4J3-9	1	A4J3-3	11
A4J3-10	2	A2J2-2	15
A4J3-11	3	A3J2-8	16
A4J3-12	4	A2J2-1	17
A4J3-13	5	A2J2-5	18
A4J3-14	6	A4J3-1	19
A4J3-15	7	A3J2-7	20
A4J3-16	8		
A4J3-2	10		

DOOR PLUG

A7 CABINET

NOTE : - DIODES

6		
5		
4		
3		
2		
1		
OPER.	DESCRIPTION	TOOL No.

FORM 4032

W-1186-6 c

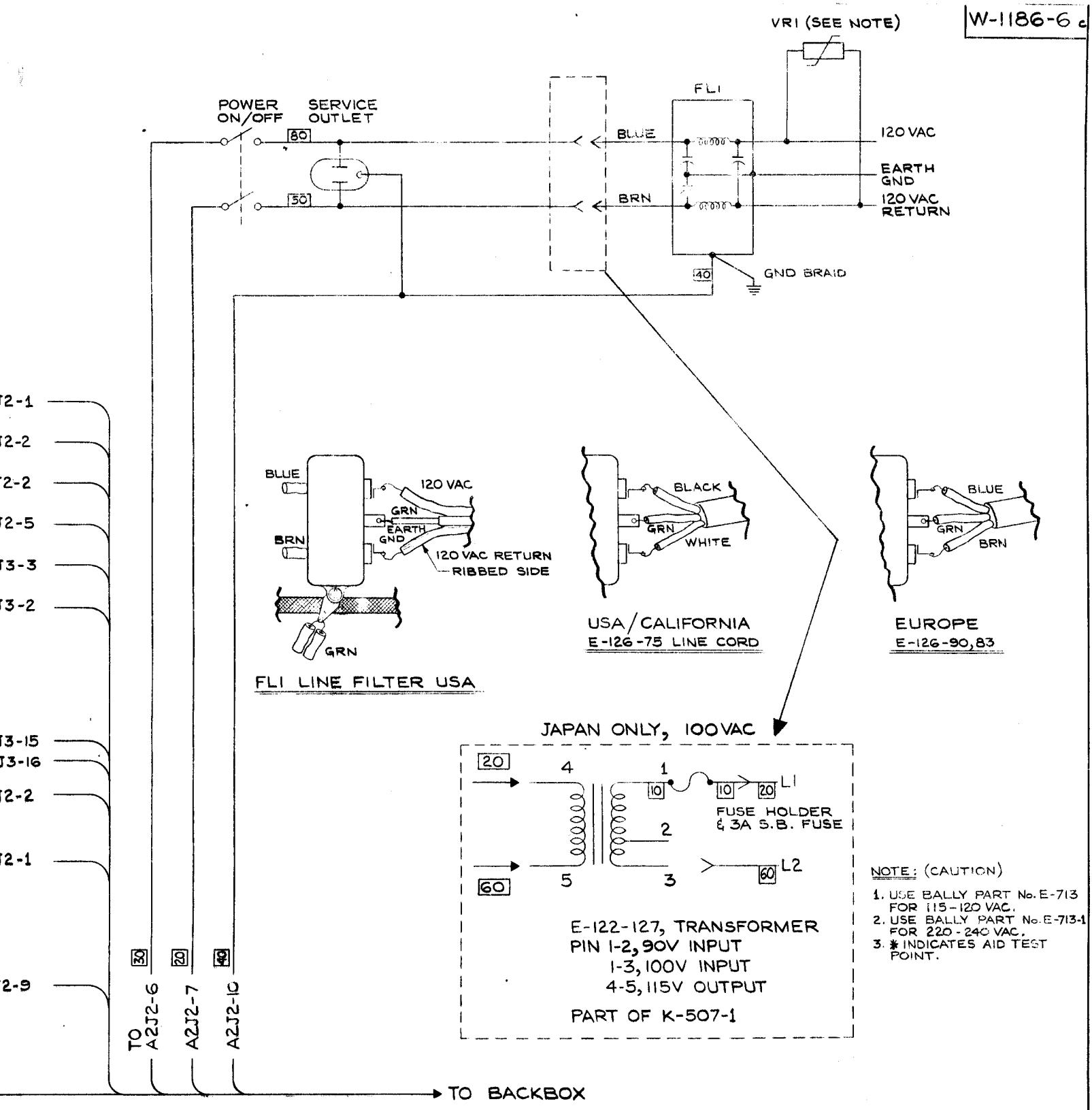

FLI LINE FILTER USA

USA/CALIFORNIA
E-126-75 LINE CORD

EUROPE
E-126-90,83

JAPAN ONLY, 100VAC

NOTE: (CAUTION)

1. USE BALLY PART No. E-713 FOR 115-120 VAC.
2. USE BALLY PART No. E-713-1 FOR 220-240 VAC.
3. * INDICATES AID TEST POINT.

ASS'Y. WIRING

ARE IN4004, (E-587-6)

ALL DESIGN, OPERATIVE AND PROCESS DATA PERTAINING TO THE ARTICLE SHOWN ON THIS SHEET IS THE PROPERTY OF BALLY MFG. CORP., CHICAGO, ILL. THIS INFORMATION IS DISCLOSED IN CONFIDENCE AND IS NOT TO BE COPIED, REPRODUCED, REVEALED TO OR APPROPRIATED BY OTHERS, IN PART OR IN WHOLE, WITHOUT THE EXPRESS CONSENT OF THE OWNERS. THE PRINT IS LOANED AND MUST NOT BE USED IN ANY MANNER DETRIMENTAL TO THE INTEREST OF THE OWNERS, AND MUST BE RETURNED ON DEMAND.

LET.	CHANGE	DATE	BY	CK.

REMOVE ALL BURRS

TOLERANCES ON DIMENSIONS UNLESS OTHERWISE SPECIFIED
FRACTIONS ±
DECIMALS ±
ANGLES ±

DO NOT SCALE DRAWING

DR. BY	E.V.
DATE	3-28-79
CK. BY	
DATE	
AP'D BY	J.D.
DATE	4-5-79
AP'D BY	D.B.M.
DATE	4-5-79
FINISH	

Bally MANUFACTURING CORP.
2640 BELMONT AVENUE
CHICAGO, ILLINOIS
1161-E

PRINT CONTROL	PROD. CONT.	PUR.	ENG.	T. D.	COST	INC. INSP.	TOOL INSP.	COMAR	VEND.	TOTAL	SCALE
					1						~

NAME: WIRING DIAGRAM ELECTRONIC

ASSEM. No.

MATERIAL

PART No. W-1186-6 c

SCAN LINES, INC. CHICAGO

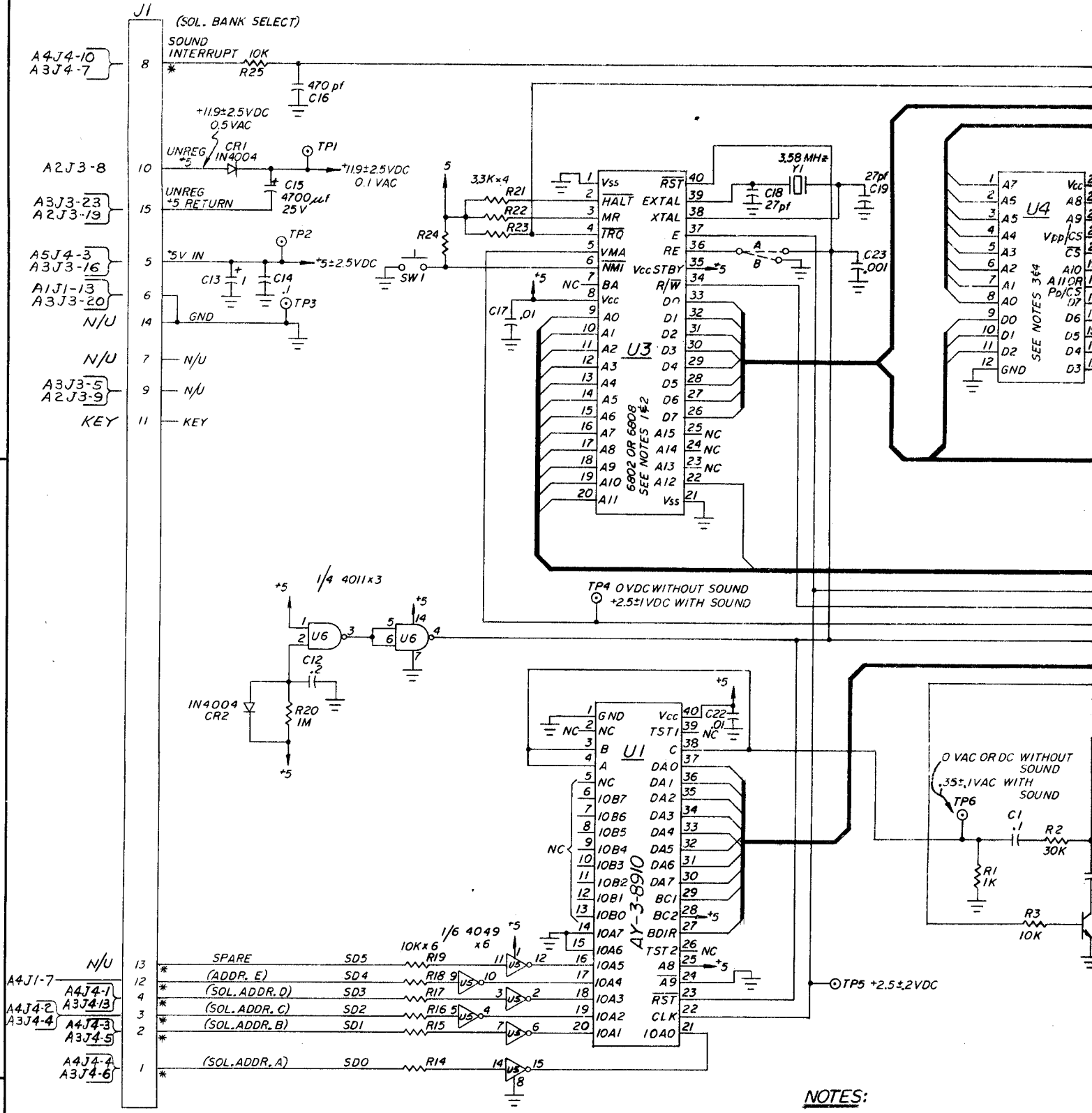

NOTES:

1. USE JUMPER A IF INTERNAL RAM IS
2. " " B " EXTERNAL " "
3. " " C " 2K ROM (EPROM) "
4. " " D " 4K " " "
5. U7, R12, R11, R13, C10, C11 NOT USED ON T
6. UNLESS OTHERWISE INDICATED, ALL R
   ALL CAPACITOR VALUES ARE IN MMF
7. PREFIX ALL REFERENCE DESIGNATION
8. * INDICATES "AID" TEST POINT.

OPER.	DEPT.	DESCRIPTION	TOOL NO.

TELEDYNE POST N55983

PART NO. W-1211 c

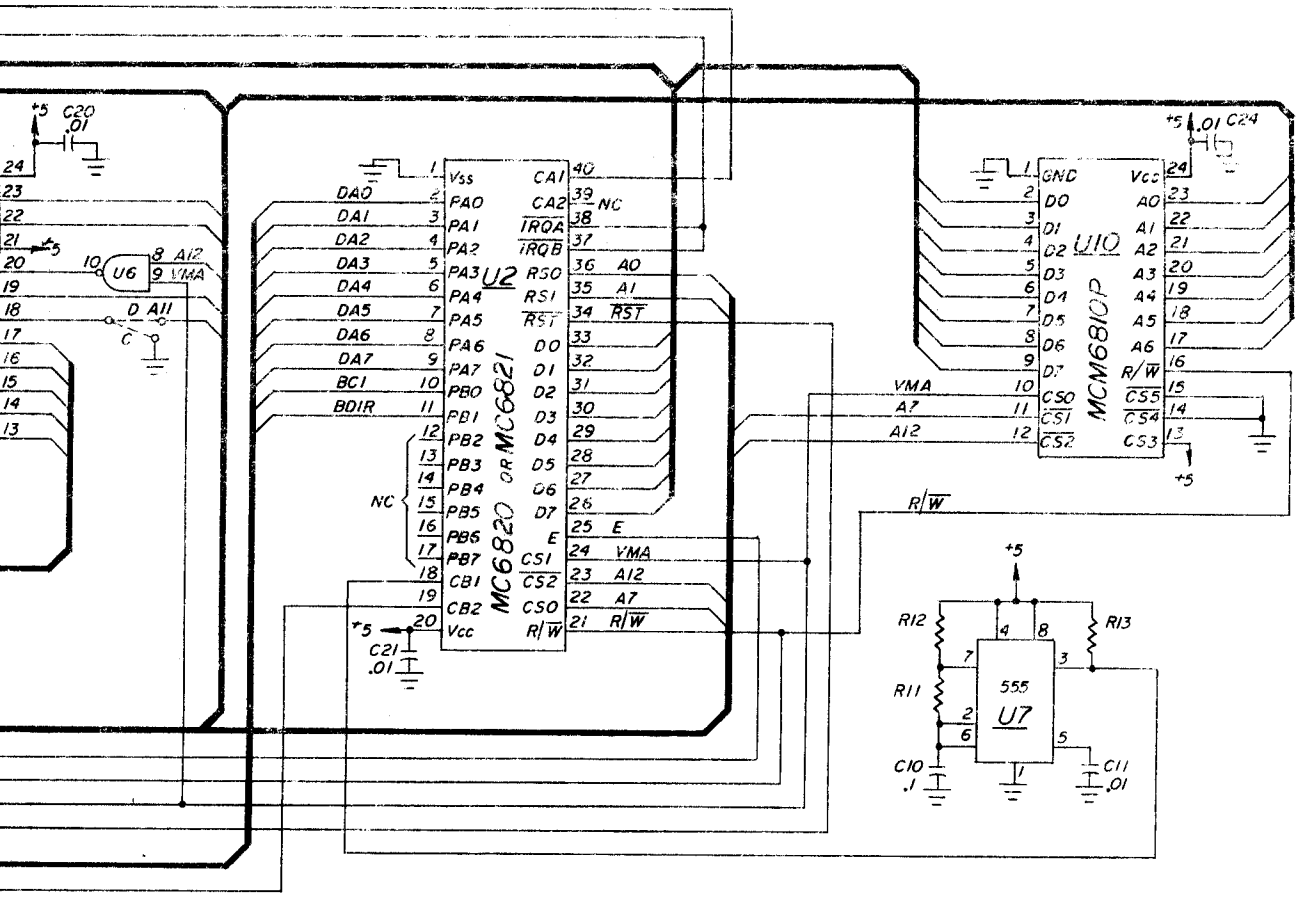

S USED (6802 WITHOUT U10).
" (6808/6810, U10).
" (GI 9316B INTEL 2716 OR EQUIV.).
" (TI TMS 2532 TMS 4732 OR EQUIV.).
THIS ASSEMBLY.
RESISTOR VALUES ARE IN OHMS,
FD'S.
NS WITH A8.

ALL DESIGN, OPERATIVE AND PROCESS DATA PERTAINING TO THE ARTICLE SHOWN ON THIS SHEET IS THE PROPERTY OF BALLY MFG. CORP., CHICAGO, ILL. THIS INFORMATION IS DISCLOSED IN CONFIDENCE AND IS NOT TO BE COPIED, REPRODUCED, REVEALED TO OR APPROPRIATED BY OTHERS, IN PART OR IN WHOLE, WITHOUT THE EXPRESS CONSENT OF THE OWNERS. THE PRINT IS LOANED AND MUST NOT BE USED IN ANY MANNER DETRIMENTAL TO THE INTEREST OF THE OWNERS, AND MUST BE RETURNED ON DEMAND.

NO.	LET.	CHANGE	DATE	BY
3	C	WAS 220uf 25 V	1-29-80	J.D
2	B	WAS .1	1-29-80	J D
1	A	TEST INFO ADDED	12-11-79	NRW

REMOVE ALL BURRS
TOLERANCES ON DIMENSIONS UNLESS OTHERWISE SPECIFIED
FRACTIONS ± .008
DECIMALS ± .003
EXCEPT HOLE DIA.'S
ANGLES ± 1/2°
DO NOT SCALE DRAWING

DR. BY NRW DATE 9-13-79
CK. BY DATE 9-19-79
APP'D BY DATE 9-17-79
APP'D BY DATE 9/26/79
FINISH:
HARDENING:

Bally MANUFACTURING CORP.
2640 BELMONT AVENUE
CHICAGO, ILLINOIS
1173

PRINT CONTROL | DIE SIZE | C.C. | FT. PER M. | LBS. PER M.

NAME COMPUTER SOUND MODULE A8 SCHEMATIC
ASSEM. NO. USED AS-2518-51
SCALE NONE
MATERIAL
CODE
PART NO. W-1211 c

TRANSFORMER ASSEMBLY A2

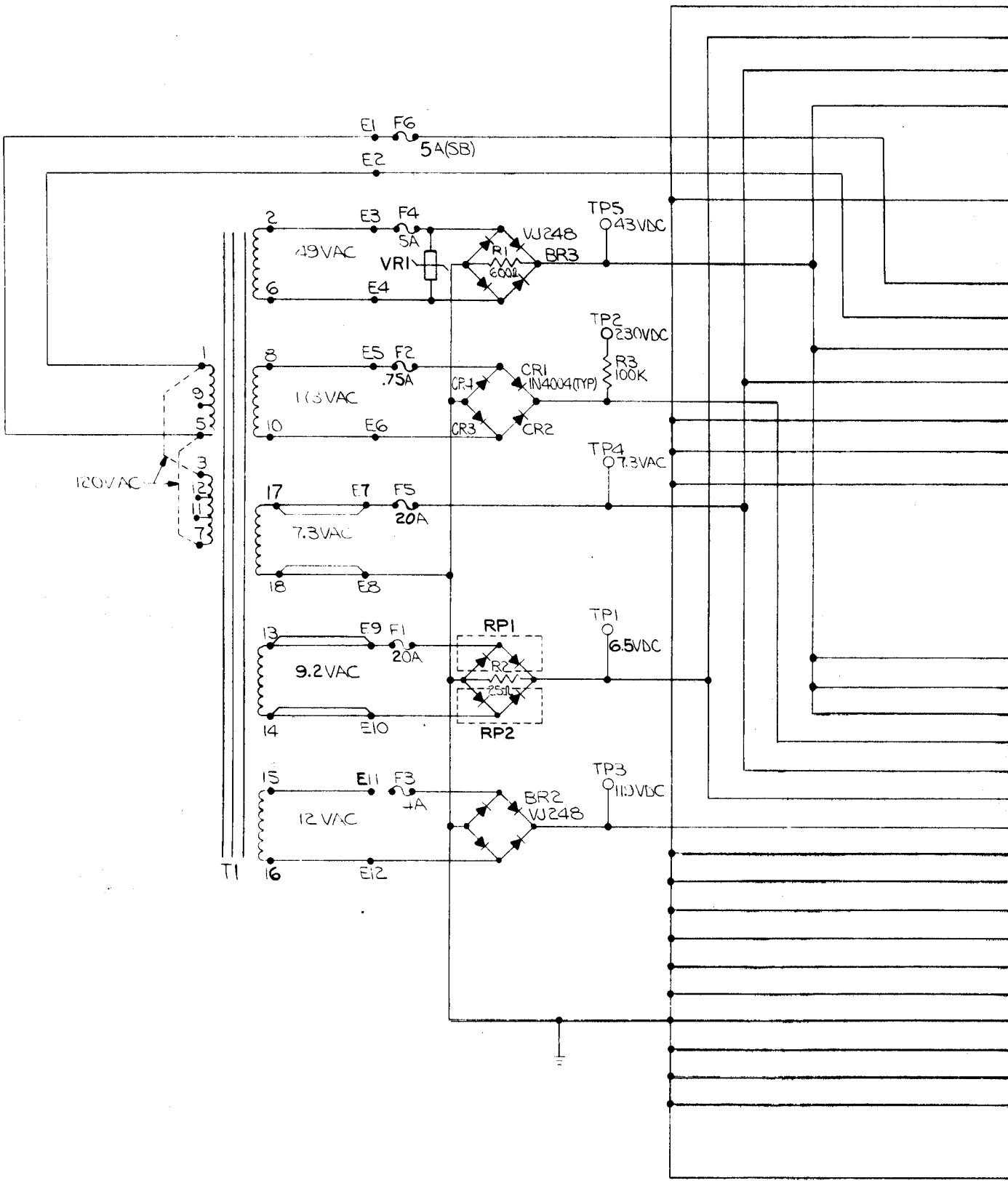

OPER.	DEPT.	DESCRIPTION	TOOL No.

DIETZGEN 196H

G PART NO. W-1185-3c

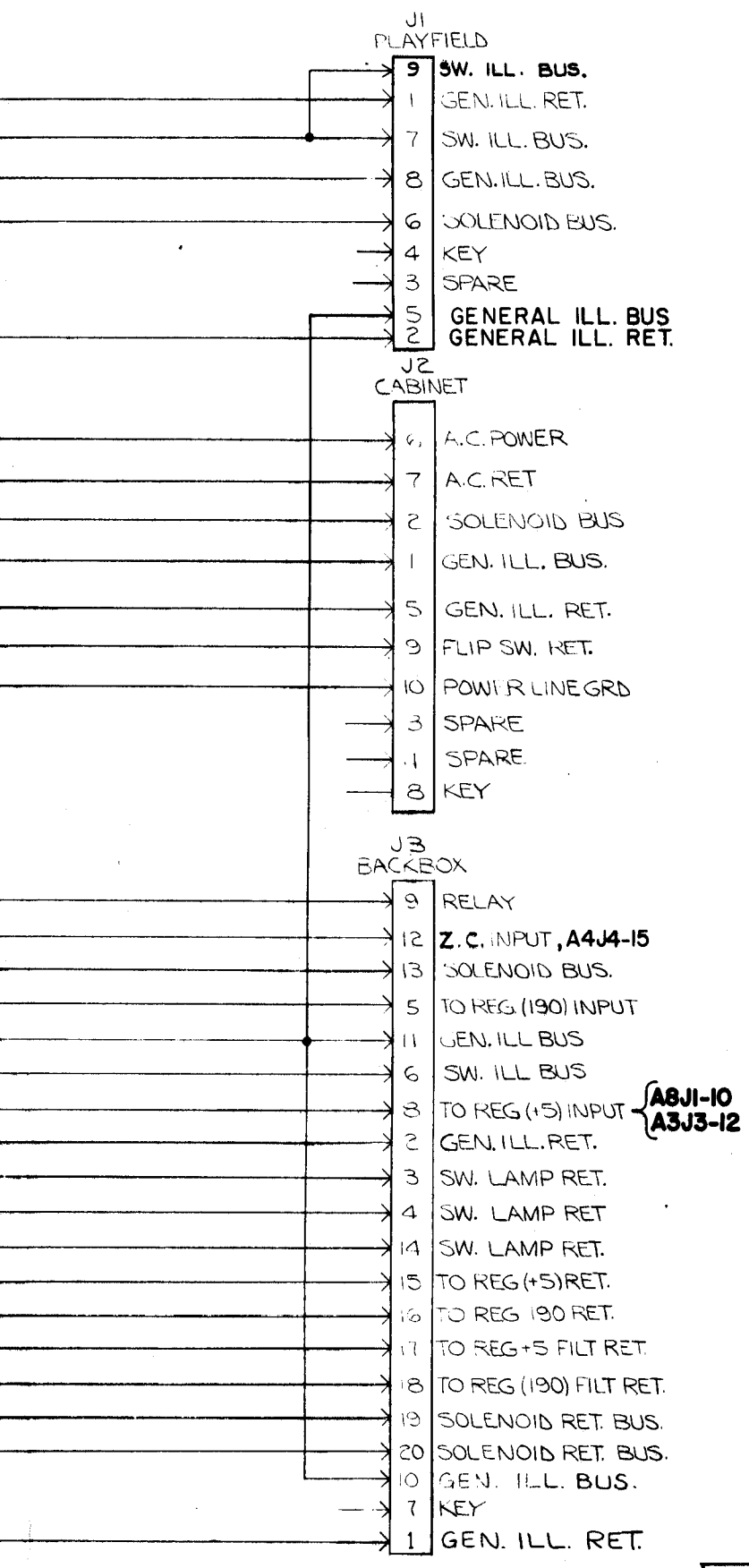

NOTES:

1. WIRE A.C. POWER AND TERMINALS PER TABLE 1.
2. VOLTAGES SHOWN ARE FOR GAME IN POWER-UP CONDITION.
3. PREFIX ALL REFERENCE DESIGNATIONS WITH A2.

TABLE 1
POWER LINE CONNECTIONS

LINE VOLTAGE VRMS A.C.	STRAP TERMINALS	APPLY POWER TO TERMINALS
115	1 TO 3 AND 9 TO 11	1 AND 9
120	1 TO 3 AND 5 TO 7	1 AND 5
220	3 TO 5	1 AND 12
240	3 TO 5	1 AND 7

DIE SIZE — C.C. — FT. PER M — LBS. PER M —

ALL DESIGN, OPERATIVE AND PROCESS DATA PERTAINING TO THE ARTICLE SHOWN ON THIS SHEET IS THE PROPERTY OF BALLY MFG. CORP., CHICAGO, ILL. THIS INFORMATION IS DISCLOSED IN CONFIDENCE AND IS NOT TO BE COPIED, REPRODUCED, REVEALED TO OR APPROPRIATED BY OTHERS, IN PART OR IN WHOLE, WITHOUT THE EXPRESS CONSENT OF THE OWNERS. THE PRINT IS LOANED AND MUST NOT BE USED IN ANY MANNER DETRIMENTAL TO THE INTEREST OF THE OWNERS, AND MUST BE RETURNED ON DEMAND.

NO.	LET.	CHANGE	DATE	BY	CK.

REMOVE ALL BURRS

TOLERANCES ON DIMENSIONS UNLESS OTHERWISE SPECIFIED
FRACTIONS ±
DECIMALS ±
ANGLES ±

DO NOT SCALE DRAWING

DR. BY E.V. DATE
CK. BY DATE
AP'D BY J D DATE 3-4-80
AP'D BY DATE 3/4/80
FINISH: X
HARDENING: X

Bally MANUFACTURING CORP.
2640 BELMONT AVENUE
CHICAGO, ILLINOIS
1178

PRINT CONTROL → PROD CONT. | PUR. DEPT. | ENG. FILE | TOOL DESIGN | COST DEPT. | INC. INSP. | TOOL INSP. | MACH. INSP. | TOTAL | SCALE X

NAME POWER TRANSFORMER MODULE SCHEMATIC

ASSEM. NO. USED ON/W X

MATERIAL

PART NO. W-1185-3c

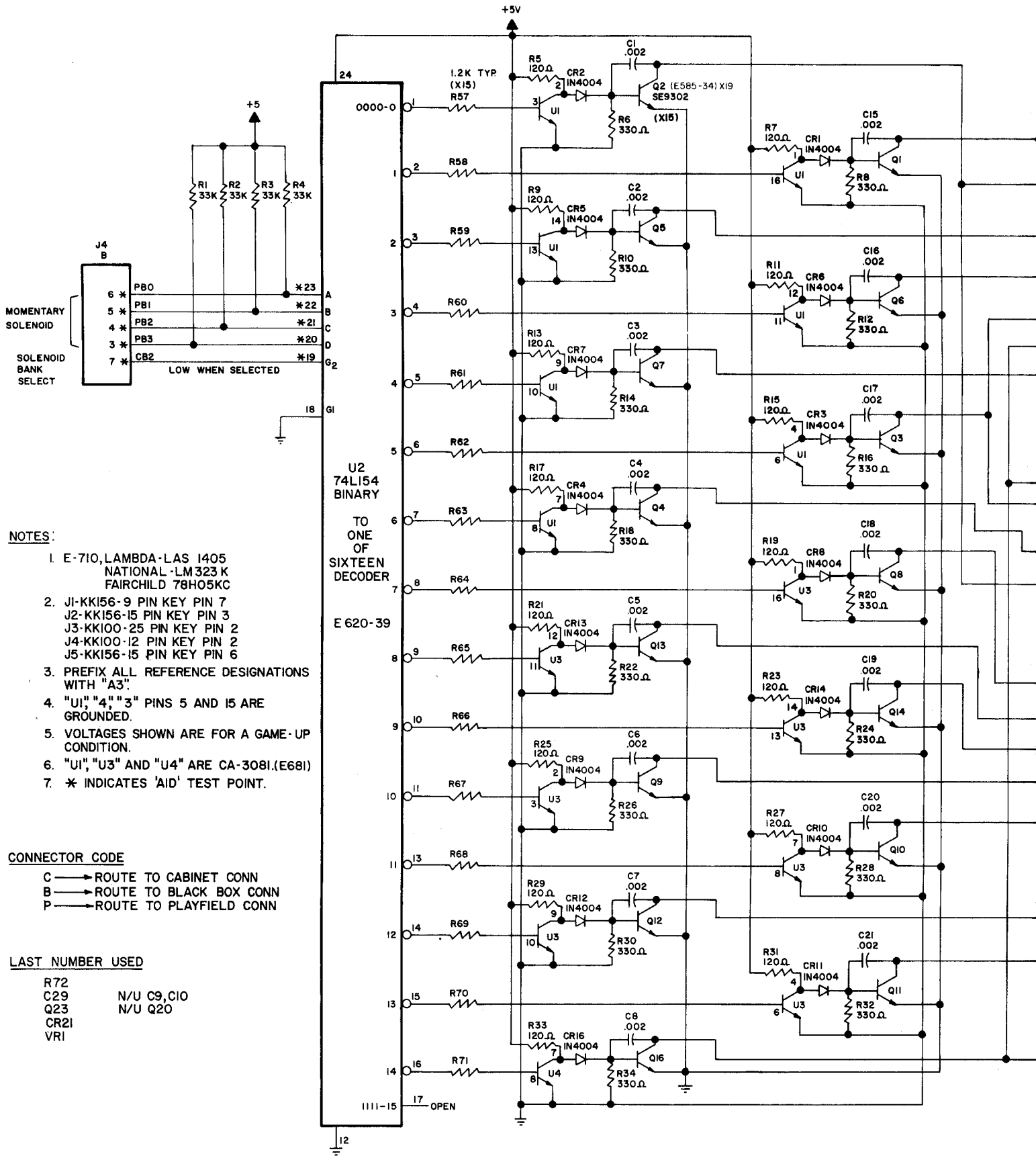

NOTES:

1. E-710, LAMBDA-LAS 1405
   NATIONAL-LM323K
   FAIRCHILD 78H05KC
2. J1-KK156-9 PIN KEY PIN 7
   J2-KK156-15 PIN KEY PIN 3
   J3-KK100-25 PIN KEY PIN 2
   J4-KK100-12 PIN KEY PIN 2
   J5-KK156-15 PIN KEY PIN 6
3. PREFIX ALL REFERENCE DESIGNATIONS WITH "A3".
4. "U1", "4", "3" PINS 5 AND 15 ARE GROUNDED.
5. VOLTAGES SHOWN ARE FOR A GAME-UP CONDITION.
6. "U1", "U3" AND "U4" ARE CA-3081.(E681)
7. * INDICATES 'AID' TEST POINT.

CONNECTOR CODE

C ——→ ROUTE TO CABINET CONN
B ——→ ROUTE TO BLACK BOX CONN
P ——→ ROUTE TO PLAYFIELD CONN

LAST NUMBER USED

R72
C29 N/U C9, C10
Q23 N/U Q20
CR21
VR1

OPER.	DEPT.	DESCRIPTION	TOOL NO.

G PART NO. W-1183-23c

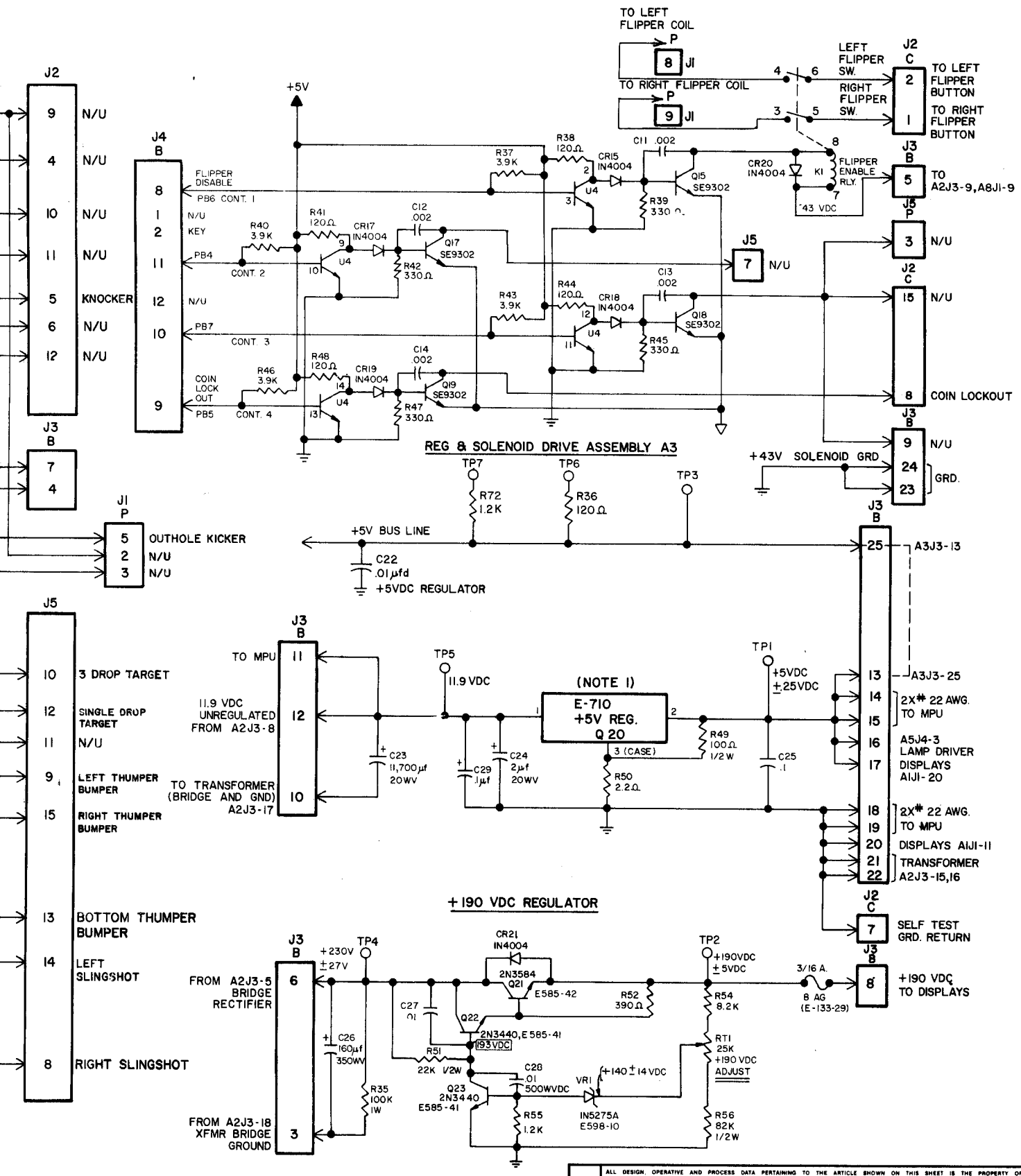

ALL DESIGN, OPERATIVE AND PROCESS DATA PERTAINING TO THE ARTICLE SHOWN ON THIS SHEET IS THE PROPERTY OF BALLY MFG. CORP. CHICAGO, ILL. THIS INFORMATION IS DISCLOSED IN CONFIDENCE AND IS NOT TO BE COPIED, REPRODUCED, REVEALED TO OR APPROPRIATED BY OTHERS, IN PART OR IN WHOLE, WITHOUT THE EXPRESS CONSENT OF THE OWNERS. THE PRINT IS LOANED AND MUST NOT BE USED IN ANY MANNER DETRIMENTAL TO THE INTEREST OF THE OWNERS, AND MUST BE RETURNED ON DEMAND.

DR. BY R.V.	DATE 2-1-80
CK. BY	DATE 2-1-80
AP'D BY T.D.	DATE 2-1-80
AP'D BY	DATE 2-1-80
FINISH:	
HARDENING:	

Bally MANUFACTURING CORP.
2640 BELMONT AVENUE
CHICAGO, ILLINOIS
1178

PRINT CONTROL | DIE SIZE- | C.C.- | FT. PER M- | LBS. PER M-

NAME: SOLENOID DRIVER VOLTAGE REGULATOR SCHEMATIC
ASSEM. NO. USED | SCALE

MATERIAL CODE: SPACE INVADERS
PART NO. W-1183-23c

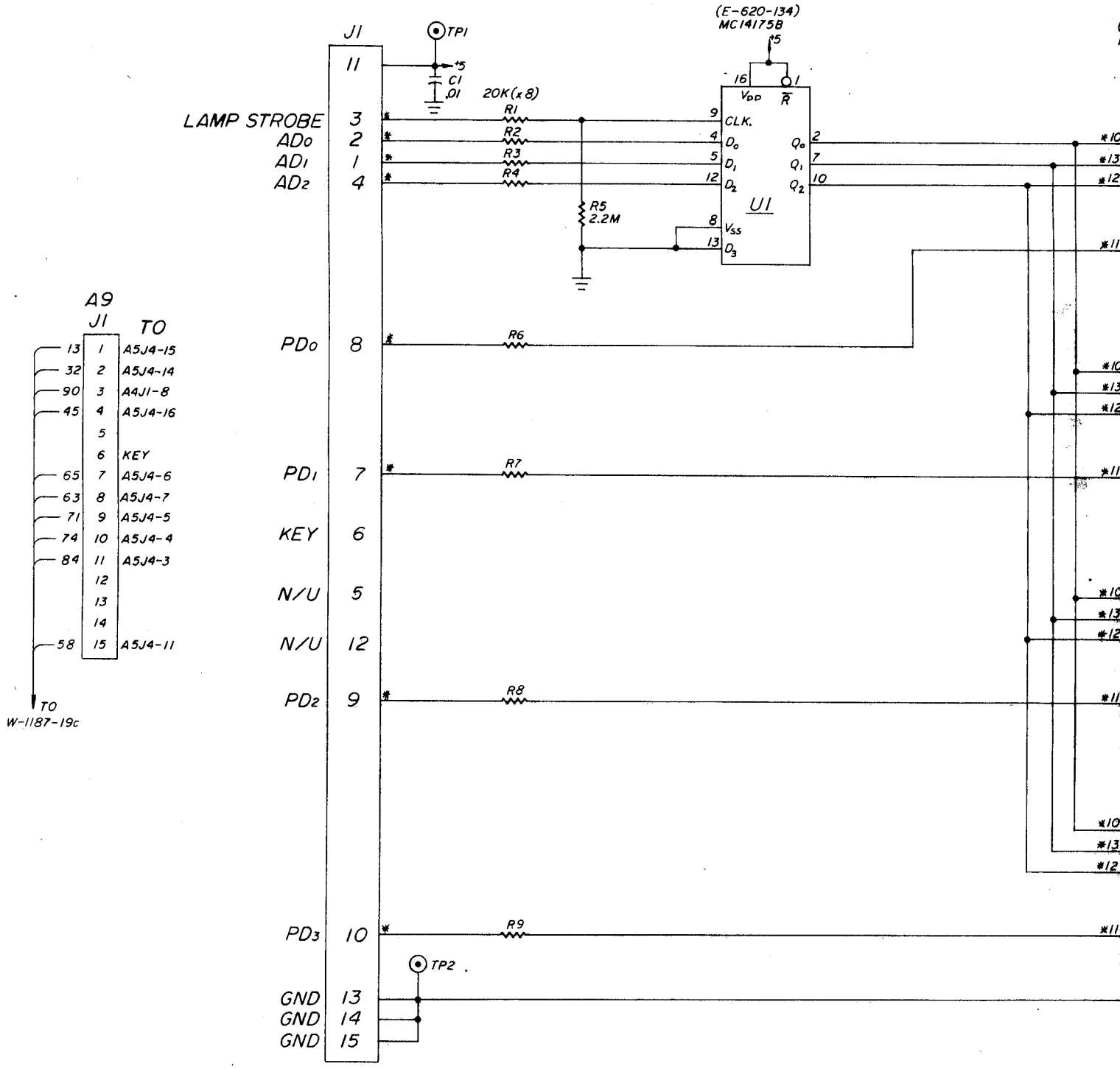

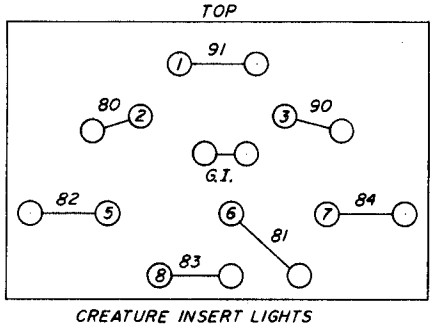

CREATURE INSERT LIGHTS

NOTES:
1. ALL RESISTORS ARE 1/4W, ±5%.
2. VOLTAGES SHOWN ARE FOR GAME UP CONDITIONS.
3. * INDICATES "AID" TEST POINT.
4. SCR's ARE MCR-106-1, (E-585-29).
5. PREFIX ALL REFERENCE DESIGNATIONS WITH "A9".

LEFT

OPER.	DEPT.	DESCRIPTION	TOOL NO.

TELEDYNE POST N55983

PART NO. W-1207-2

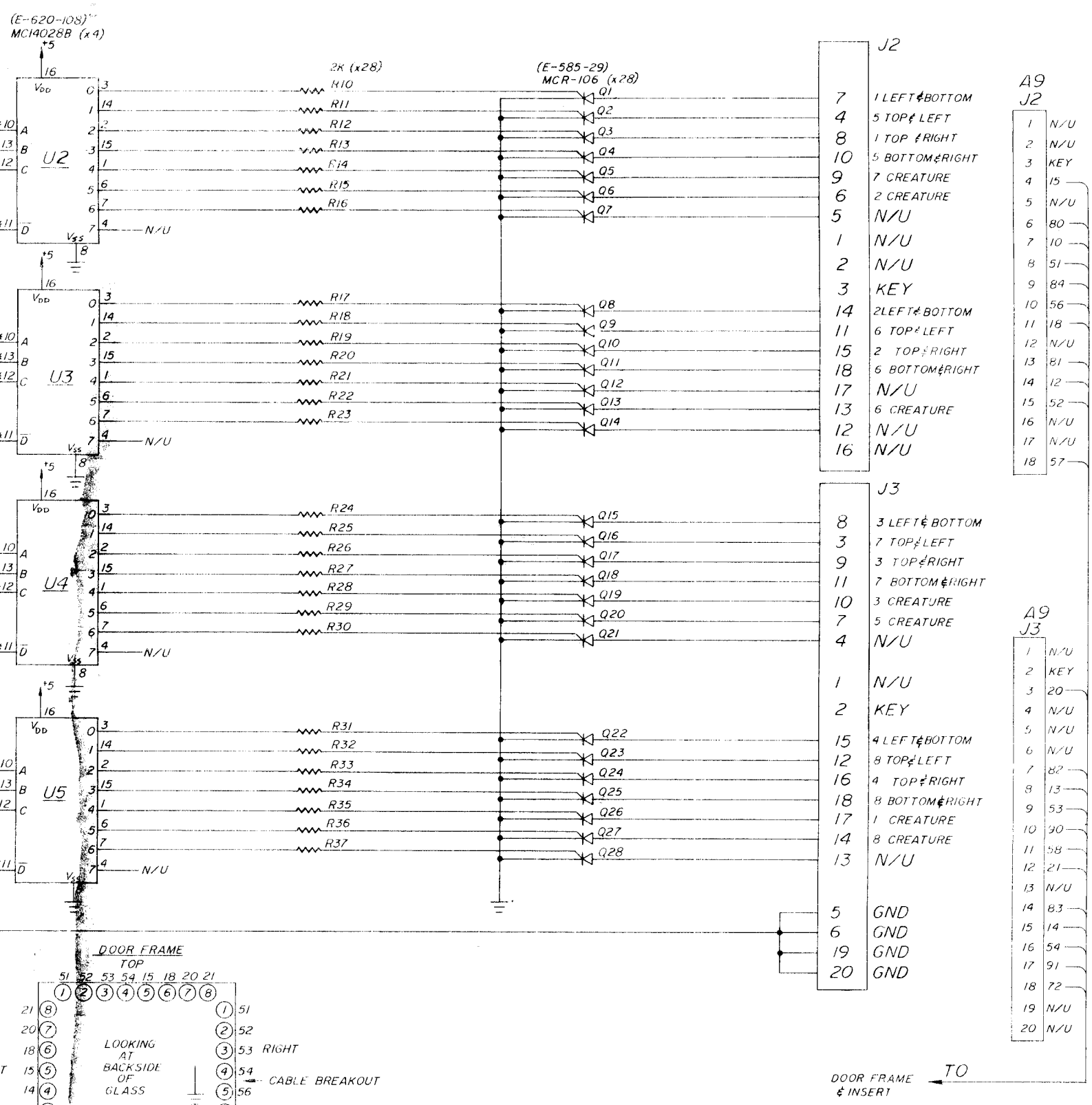

ALL DESIGN, OPERATIVE AND PROCESS DATA PERTAINING TO THE ARTICLE SHOWN ON THIS SHEET IS THE PROPERTY OF BALLY MFG CORP. CHICAGO, ILL. THIS INFORMATION IS DISCLOSED IN CONFIDENCE AND IS NOT TO BE COPIED, REPRODUCED, REVEALED TO OR APPROPRIATED BY OTHERS, IN PART OR IN WHOLE, WITHOUT THE EXPRESS CONSENT OF THE OWNERS. THE PRINT IS LOANED AND MUST NOT BE USED IN ANY MANNER DETRIMENTAL TO THE INTEREST OF THE OWNERS, AND MUST BE RETURNED ON DEMAND.

NO.	LET.	CHANGE	DATE	BY
1	A	REVISED	1-30-80	WW

REMOVE ALL BURRS

TOLERANCES ON DIMENSIONS UNLESS OTHERWISE SPECIFIED
FRACTIONS ± .008
DECIMALS ± .003
EXCEPT HOLE DIA .S
ANGLES ± 1/2°

DO NOT SCALE DRAWING

DR. BY W.E.M.	DATE 1-9-80	
CK. BY	DATE	
AP'D BY J.b	DATE 1-30-80	
AP'D BY	DATE 1-30-80	
FINISH:		
HARDENING:		

Bally MANUFACTURING CORP.
2640 BELMONT AVENUE
CHICAGO, ILLINOIS
1178

PRINT CONTROL	DIE SIZE:	C.C.:	FT. PER M:	LBS. PER M

NAME: AUXILIARY LAMP DRIVER "A9"
ASSEM. NO. USED:
SCALE: -X-
MATERIAL CODE: SPACE INVADERS
PART NO. W-1207-2

TABLE A A1J2

FROM	PIN	WIRE
A2J3-6	1	20
A5J2-14	2	12
A2J3-2	3	50
A2J3-11	4	10
A5J2-23	5	97
A5J2-15	6	23
A5J2-22	7	62
A5J2-8	8	93
A5J2-1	9	60
A5J2-2	10	20
A5J2-11	11	95
A5J2-21	12	47
A5J2-10	13	98
A5J2-7	14	91
A5J2-6	15	85
A5J2-20	16	35
A5J2-16	17	34
A2J3-1	18	40
A2J3-10	19	70
A5J2-13	20	53
A5J2-12	21	61
A5J2-4	22	72
A5J2-3	23	84
	24	

INSERT TO BACK CAB. PLUG

A1 INSERT

TO	(PLAYER 1) 1A1 J1	(PLAYER 2) 2A1 J1	(PLAYER 3) 3A1 J1	(PLAYER 4) 4A1 J1	CREDIT DISPLAY 5A1 J1
10 — A3J3-8	1	1	1	1	1
N/U	2	2	2	2	2
N/U	3	3	3	3	3
80 — A4J1-1	4	4	4	4	4
20 — A4J1-2	5	5	5	5	5
30 — A4J1-3	6	6	6	6	6
40 — A4J1-4	7	7	7	7	7
50 — A4J1-5	8	8	8	8	8
58 — A4J1-6	9	9	9	9	9
70 — A4J1-10	10	10	10	10	10
N/U	11	11	11	11	11
N/U	12	12	12	12	12
60 — A3J3-20	13	13	13	13	13
KEY	14	14	14	14	14
85 — A4J1-20	15	31 15	72 15	67 15	18 15
54 — A4J1-28	16	16	16	16	16
38 — A4J1-27	17	17	17	17	17
25 — A4J1-26	18	18	18	18	18
51 — A4J1-25	19	19	19	19	19
45 — A3J3-17	20	20	20	20	20

A4J1-21 A4J1-22 A4J1-23 A4J1-24

TO		
12	A5J2-14	
23	A5J2-15	
20	A5J2-2	
60	A5J2-1	
47	A5J2-21	SHOOT AGAIN
95	A5J2-11	GAME OVER
98	A5J2-10	TILT
34	A5J2-16	
35	A5J2-20	
85	A5J2-6	
91	A5J2-7	
97	A5J2-23	HIGH SCORE
93	A5J2-8	MATCH
62	A5J2-22	BALL IN PLAY
84	A5J2-3	
72	A5J2-4	
	A5J2-5	NOTE 1
	A5J2-9	NOTE 1
61	A5J2-12	
53	A5J2-13	

SWI ILL.

A1J2 SEE TABLE A

SEE TABLE "B" → TO PL

LAMP DRIVER A5

J4		TO
51	1	A2J3-4
18	2	A2J3-3
84	3	A3J3-16
74	4	A4J1-19
71	5	A4J1-18
65	6	A4J1-17
63	7	A4J1-16
	8	KEY
	9	N/U
	10	N/U
58	11	A2J3-14
	12	SPARE GND
75	13	A4J1-11
32	14	A4J1-15
13	15	A4J1-14
45	16	A4J1-13
48	17	A4J1-12

J2		TO
60	1	LEFT E. B. LANE
20	2	RIGHT E. B. LANE
84	3	N/U
72	4	N/U
	5	N/U
85	6	20K DROP TARGET
91	7	25K DROP TARGET
93	8	MATCH
	9	N/U
98	10	TILT
95	11	GAME OVER
61	12	N/U
53	13	N/U
12	14	SPECIAL DROP TAR.
23	15	N/U
34	16	10K DROP TARGET
	17	N/U
	18	KEY
	19	N/U
35	20	15K DROP TARGET
47	21	SHOOT AGAIN
62	22	BALL IN PLAY
97	23	HIGH SCORE TO DATE

J1		TO
41	1	2K BONUS
43	2	40K (1-5)
45	3	3X HOOP, 2X BONUS
35	4	N/U
48	5	20K CLONE CHAMBER
25	6	BONUS INC. 50,000 ARROW
34	7	No. 2 TARGET
51	8	10K BONUS
52	9	6K BONUS
23	10	TOP LEFT ROLLOVER
65	11	TARGET INC. 50,000 ARROW
61	12	SPECIAL RIGHT HOOP
96	13	RIGHT SMALL FLIP FEED LANE
54	14	20K (1-5)
13	15	25K HOOP
12	16	No. 1 TARGET (FROM LEFT)
57	17	9K BONUS
58	18	1K BONUS
60	19	5K BONUS
	20	KEY
	21	N/U
	22	N/U
56	23	2X HOOP
50	24	10K CLONE CHAMBER
90	25	50K CLONE CHAMBER
91	26	N/U
53	27	5K HOOP
78	28	No. 5 HOOP TARGET

J3		TO
10	1	4K BONUS
95	2	LEFT SMALL FLIP FEED LANE
81	3	TOP RIGHT R. O.
14	4	No. 4 TARGET
	5	N/U
	6	N/U
	7	N/U
	8	KEY
15	9	SPECIAL (1-5)
91	10	40K CLONE CHAMBER
20	11	5X HOOP, 4X BONUS
21	12	8K BONUS
13	13	CREDIT INDICATOR
84	14	SPINNER 1000
53	15	5X BONUS
25	16	60K (1-5)
27	17	4X HOOP, 3X BONUS
56	18	TOP CLONE CHAMBER
67	19	20K BONUS
64	20	No.5 TARGET ARROW
30	21	30K CLONE CHAMBER
23	22	SAME PLAYER S.A.
98	23	TOP CENTER R. O.
72	24	SPECIAL LEFT HOOP
36	25	7K BONUS
38	26	3K BONUS
40	27	No. 3 TARGET
	28	N/U

J5		TEST CONNECTOR
	1	D7
	2	D6
	3	D5
	4	D4
	5	D3
	6	D2
	7	D1
	8	DØ
	9	AI3
	10	AI2
	11	AII
	12	AIO
	13	A9
	14	A8
	15	A7
	16	A6
	17	A5
	18	A4
	19	A3
	20	A2
	21	AI
	22	AØ
	23	R/W
	24	HLT
	25	RES
	26	VMA
	27	Ø 2
	28	EX MEM.
	29	KEY
	30	+ 5 V.D.C.
	31	GND
	32	A4UII-18

MPU A4

J1		TO
80	1	AIJI-4
20	2	AIJI-5
30	3	AIJI-6
40	4	AIJI-7
50	5	AIJI-8
58	6	AIJI-9
62	7	A8JI-12
90	8	A9JI-3
	9	KEY
70	10	AIJI-10
75	11	A5J4-13
48	12	A5J4-17
45	13	A5J4-16
13	14	A5J4-15
32	15	A5J4-14
63	16	A5J4-7
65	17	A5J4-6
71	18	A5J4-5
74	19	A5J4-4
85	20	1 AIJI-15
31	21	2AIJI-15
72	22	3AIJI-15
67	23	4AIJI-15
18	24	5AIJI-15
51	25	AIJI-19
25	26	AIJI-18
38	27	AIJI-17
54	28	AIJI-16

J4		TO
15	1	A3J4-3
78	2	A3J4-4
21	3	A3J4-5
23	4	A3J4-6
36	5	A3J4-11
27	6	A3J4-9
25	7	A3J4-8
31	8	A3J4-10
	9	N/U
61	10	A3J4-7
	11	N/C
14	12	A3J3-11
	13	N/C
	14	KEY
90	15	A2J3-12
96	16	A3J3-14
54	17	A3J3-15
94	18	A3J3-18
81	19	A3J3-19

31	
52	
53	
31	
54	
56	
57	
58	
60	
63	
65	
70	

TO CABINET

TO PLAYFIELD

NOTES

1. THESE PINS ARE RESERVED FOR FUTURE USE.
2. WIRE COLORS ARE SHOWN FOR ALL CONNECTOR PINS, SOME WIRES MAY NOT BE USED IN ALL GAMES.
3. * INDICATES AID TEST POINT.

TABLE "B"

FROM	TO	WIRE
A5J2-14	1	12
A5J2-2	2	20
A5J2-16	3	34
A5J2-20	4	35
A5J2-1	5	60
A5J2-6	6	85
A5J2-7	7	91
A2J3-6	8	20

PANEL TO BACK CAB. PLUG

A2 TRANSFORMER

WITCHED
L. BUS
5.4V.D.C.

TO A2J3-11 — 5.9V.A.C.

10 — GEN ILL. LAMPS ( ) — TO A2J3-2

50

TO A2J3-10

70 — GEN ILL. ( ) LAMPS

TO A2J3-1

40

20 A2J3-6

PLAY FIELD (W-1192-19)

J1		TO
23	1	A4J4-4, A3J4-6
21	2	A4J4-3, A3J4-5
78	3	A4J4-2, A3J4-4
15	4	A4J4-1, A3J4-3
84	5	A5J4-3, A3J3-16
60	6	A1J1-13, A3J3-20
	7	N/U
61	8	A4J4-10, A3J4-7
30	9	A3J3-5, A2J3-9
70	10	A3J3-12
	11	KEY
62	12	A4J1-7
	13	N/U
	14	N/U
13	15	A3J3-23, A2J3-19

SOLID STATE SOUND SYSTEM MODULE A8

J2: 1 2 / 20 10

J3		TO
40	1	GEN.ILL.RET.(BACKBOX)
50	2	GEN.ILL.RET.(BACKBOX)
18	3	A5J4-2
51	4	A5J4-1
92	5	A3J3-6
20	6	SW. ILL. BUSS
	7	KEY
70	8	A3J3-12, A8J1-10
30	9	A3J3-5, A8J1-9
70	10	GEN. ILL. BUSS
10	11	GEN.ILL. BUSS
90	12	A4J4-15
53	13	SOL. BUSS
58	14	A5J4-11
52	15	A3J3-21
82	16	A3J3-22
56	17	A3J3-10
50	18	A3J3-3
13	19	A3J3-23
57	20	A3J3-24

PLAYFIELD

J1		TO
50	1	GEN.ILL.RET.(PLAY-FIELD)
40	2	GEN.ILL.RET.
	3	SPARE
	4	KEY
70	5	GEN.ILL.BUSS
60	6	SOL.BUSS(PLAYFIELD)
20	7	SW.ILL. BUSS
10	8	GEN.ILL. BUSS

CABINET

J2		TO
38	1	GEN. ILL. BUSS
40	2	SOL. BUSS
	3	SPARE
	4	SPARE GRND.
41	5	GEN. ILL. RET.
30	6	SW. AC POWER
20	7	AC RET.
	8	KEY
70	9	FLIP. SW. RET.
40	10	PWR. LINE GND.

VOLTAGE REGULATOR / SOLENOID DRIVER A3

J2		TO
1	1	ST 0
2	2	ST 1
3	3	ST 2
4	4	ST 3
1	5	ST 4
	6	KEY
	7	N/U
4	8	I 0
6	9	I 1
7	10	I 2
8	11	I 3
0	12	I 4
3	13	I 5
5	14	I 6
0	15	I 7

PLAY-FIELD SW STROBE

PLAY-FIELD SW RETURN

J3		TO
10	1	SELF TEST SW.
13	2	ST 0 — SW. CAB.
14	3	ST 1 — STROBE
	4	KEY
	5	N/U
	6	N/U
	7	N/U
	8	N/U
15	9	I 0
65	10	I 1
20	11	I 2
21	12	I 3
23	13	I 4
25	14	I 5
27	15	I 6
30	16	I 7

CAB. SW. RET.

J4		TO
	1	N/U
	2	KEY
15	3	A4J4-1
78	4	A4J4-2
21	5	A4J4-3
23	6	A4J4-4
61	7	A4J4-10
25	8	A4J4-7
27	9	A4J4-6
31	10	A4J4-8
36	11	A4J4-5
	12	N/U

J3		TO
	1	N/U
	2	KEY
50	3	A2J3-18
83	4	N/U
30	5	A2J3-9
92	6	A2J3-5
	7	NOTE 1
10	8	A1J1-1
	9	NOTE 1
56	10	A2J3-17
14	11	A4J4-12
70	12	A2J3-8
64	13	A3J3-25
96	14	A4J4-16
54	15	A4J4-17
84	16	A5J4-3
45	17	A1J1-20
94	18	A4J4-18
81	19	A4J4-19
60	20	A1J1-13
52	21	A2J3-15
82	22	A2J3-16
13	23	A2J3-19
57	24	A2J3-20
64	25	A3J3-13

J2		TO
10	1	R. FLIP. SW.
20	2	L. FLIP. SW.
	3	KEY
	4	N/U
85	5	KNOCKER
	6	NOTE 1.
31	7	TEST SW. RET.
36	8	COIN LOCKOUT
58	9	N/U
57	10	N/U
56	11	N/U
54	12	N/U
	13	
	14	
	15	

J1		TO
	1	N/U
	2	N/U
	3	N/U
	4	N/U
95	5	OUTHOLE
	6	N/U
	7	KEY
40	8	L. FLIP COIL
70	9	R. FLIP COIL

J5		TO
	1	N/U
	2	N/U
	3	N/U
	4	N/U
	5	N/U
	6	KEY
81	7	N/U
18	8	RIGHT SLINGSHOT
71	9	LEFT THUMPER BUMPER
74	10	3 DROP TARGET
78	11	N/U
75	12	SINGLE DROP TARGET
80	13	BOTTOM THUMPER BUMPER
83	14	LEFT SLINGSHOT
85	15	RIGHT THUMPER BUMPER

WIRE COLOR CODE	
1-RED	6-BROWN
2-BLUE	7-ORANGE
3-YELLOW	8-BLACK
4-GREEN	9-GRAY
5-WHITE	0-NO TRACE

ALL DESIGN, OPERATIVE AND PROCESS DATA PERTAINING TO THE ARTICLE SHOWN ON THIS SHEET IS THE PROPERTY OF BALLY MFG. CORP., CHICAGO, ILL. THIS INFORMATION IS DISCLOSED IN CONFIDENCE AND IS NOT TO BE COPIED, REPRODUCED, REVEALED TO OR APPROPRIATED BY OTHERS IN PART OR IN WHOLE WITHOUT THE EXPRESS CONSENT OF THE OWNERS. THE PRINT IS LOANED AND MUST NOT BE USED IN ANY MANNER DETRIMENTAL TO THE INTEREST OF THE OWNERS, AND MUST BE RETURNED ON DEMAND.

DR BY E. V.	DATE 1-31-80
CK. BY	DATE 2-1-80
APP'D BY J.D.	DATE 2/1/80
APP'D BY	DATE 2/1/80
FINISH:	
HARDENING:	

Bally MANUFACTURING CORP.
2640 BELMONT AVENUE
CHICAGO, ILLINOIS 1178

PRINT CONTROL | TOTAL | SCALE

NAME: PLUG CONNECTORS
ASSEM. NO. USED ON W

MATERIAL: SPACE INVADERS
PART NO. W-1187-19 C

STANPAT PRODUCTS INC. PORT WASHINGTON, N.Y.

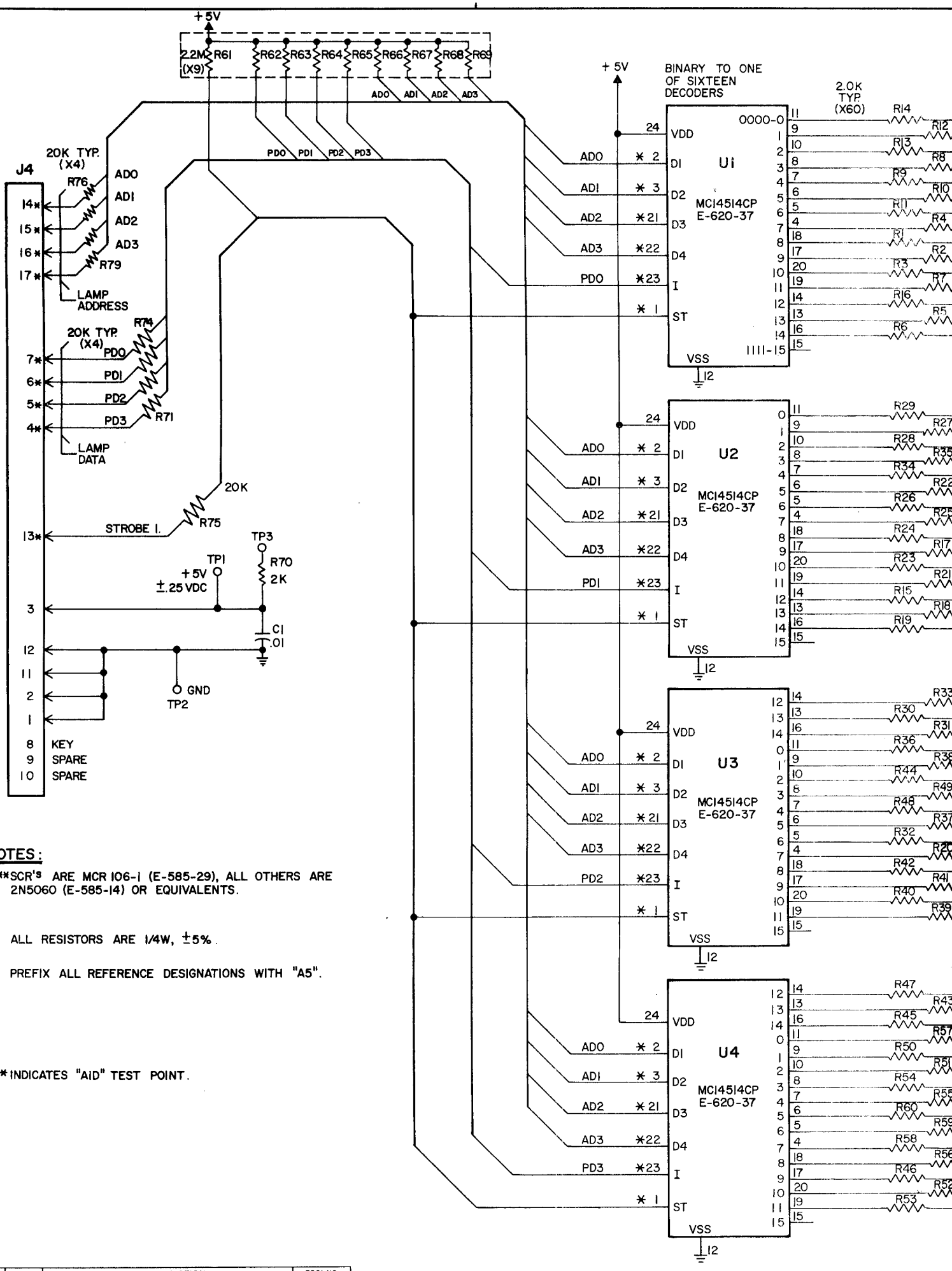

NOTES:

1. **SCR'S ARE MCR 106-1 (E-585-29), ALL OTHERS ARE 2N5060 (E-585-14) OR EQUIVALENTS.

2. ALL RESISTORS ARE 1/4W, ±5%.

3. PREFIX ALL REFERENCE DESIGNATIONS WITH "A5".

4. * INDICATES "AID" TEST POINT.

OPER.	DEPT.	DESCRIPTION	TOOL NO.

TELEDYNE POST N55983

G PART NO. W-1182-23c

SCR'S

Q14 Q12 Q13 Q8** Q9** Q10** Q11 Q4 Q1** Q2** Q3** Q7 Q16** Q5 Q6

Q29 Q27 Q28 Q35** Q34** Q22** Q26 Q25 Q24** Q17** Q23** Q21 Q15** Q18 Q19

Q33** Q30 Q31 Q36 Q38 Q44 Q49** Q48** Q37 Q32 Q20 Q42** Q41** Q40** Q39

Q47** Q43 Q45 Q57 Q50 Q51 Q54** Q55** Q60 Q59 Q58 Q56** Q46 Q52 Q53

J1

22	N/U
21	N/U
20	KEY
18	IK BONUS
19	5K BONUS
17	9K BONUS
23	2X HOOP
14	20K (1-5)
15	25K HOOP
16	#1 TARGET (FROM LEFT)
28	#5 HOOP TARGET
24	10K CLONE CHAMBER
25	50K CLONE CHAMBER
26	N/U
27	5K HOOP
1	2K BONUS
9	6K BONUS
8	10K BONUS
3	3X HOOP, 2X BONUS
2	40K (1-5)
10	TOP LEFT ROLLOVER
7	#2 TARGET
6	BONUS INCREASE 50,000 ARROW
5	20K CLONE CHAMBER
11	TARGET INCREASE 50,000 ARROW
13	RIGHT SMALL FLIP FEED LANE
4	N/U
12	SPECIAL RIGHT HOOP

— TO PLAYFIELD

J2

21	SHOOT AGAIN
13	N/U
22	BALL IN PLAY
16	10K DROP TARGET
14	SPECIAL DROP TARGET
8	MATCH
12	N/U
23	HIGH SCORE TO DATE
20	15K DROP TARGET
15	N/U
11	GAME OVER
6	20K DROP TARGET
2	RIGHT EXTRA BALL LANE
9	N/U
4	N/U
5	N/U
3	N/U
10	TILT
7	25K DROP TARGET
1	LEFT EXTRA BALL LANE
17	N/U
18	KEY
19	N/U

— TO BACK BOX

J3

26	3K BONUS
25	7K BONUS
19	20K BONUS
17	4X HOOP, 3X BONUS
16	60K (1-5)
23	TOP CENTER ROLLOVER
27	#3 TARGET
21	30 CLONE CHAMBER
20	#5 TARGET ARROW
22	S.P. SHOOTS AGAIN
24	SPECIAL LEFT HOOP
1	4K BONUS
12	8K BONUS
15	5X BONUS
11	5X HOOP, 4X BONUS
9	SPECIAL (1-5)
3	TOP RIGHT ROLLOVER
4	#4 TARGET
2	LEFT SMALL FLIP FEED LANE
10	40K CLONE CHAMBER
18	TOP CLONE CHAMBER
13	CREDIT INDICATOR
14	SPINNER 1000
5	N/U
6	N/U
7	N/U
8	KEY
28	N/U

— TO PLAYFIELD

ALL DESIGN, OPERATIVE AND PROCESS DATA PERTAINING TO THE ARTICLE SHOWN ON THIS SHEET IS THE PROPERTY OF BALLY MFG. CORP. CHICAGO, ILL. THIS INFORMATION IS DISCLOSED IN CONFIDENCE AND IS NOT TO BE COPIED, REPRODUCED, REVEALED TO OR APPROPRIATED BY OTHERS IN PART OR IN WHOLE, WITHOUT THE EXPRESS CONSENT OF THE OWNERS. THE PRINT IS LOANED AND MUST NOT BE USED IN ANY MANNER DETRIMENTAL TO THE INTEREST OF THE OWNERS AND MUST BE RETURNED ON DEMAND.

DR. BY E. V.	DATE	Bally MANUFACTURING CORP. 2640 BELMONT AVENUE CHICAGO, ILLINOIS	#1178
CK. BY	DATE		
AP'D BY	DATE 12-1-80	PRINT CONTROL	DIE SIZE: C.C.- FT. PER M: LBS. PER M.
AP'D BY	DATE 12-1-80	NAME A5 LAMP DRIVER SCHEMATIC	ASSEM. NO. USED / SCALE
FINISH:		MATERIAL SPACE INVADERS	PART NO. W-1182-23c
HARDENING		CODE	

PLAYFIELD MYLAR PROTECTORS

FO-589

ENCLOSED ARE TWO MYLAR PROTECTORS WHICH MAY BE ATTACHED TO THE PLAYFIELD IN FRONT OF THE SLINGSHOT KICKERS AS SHOWN IN SKETCH. THESE WILL HELP TO PRESERVE PAINT FINISH IN FRONT OF SLINGSHOTS.
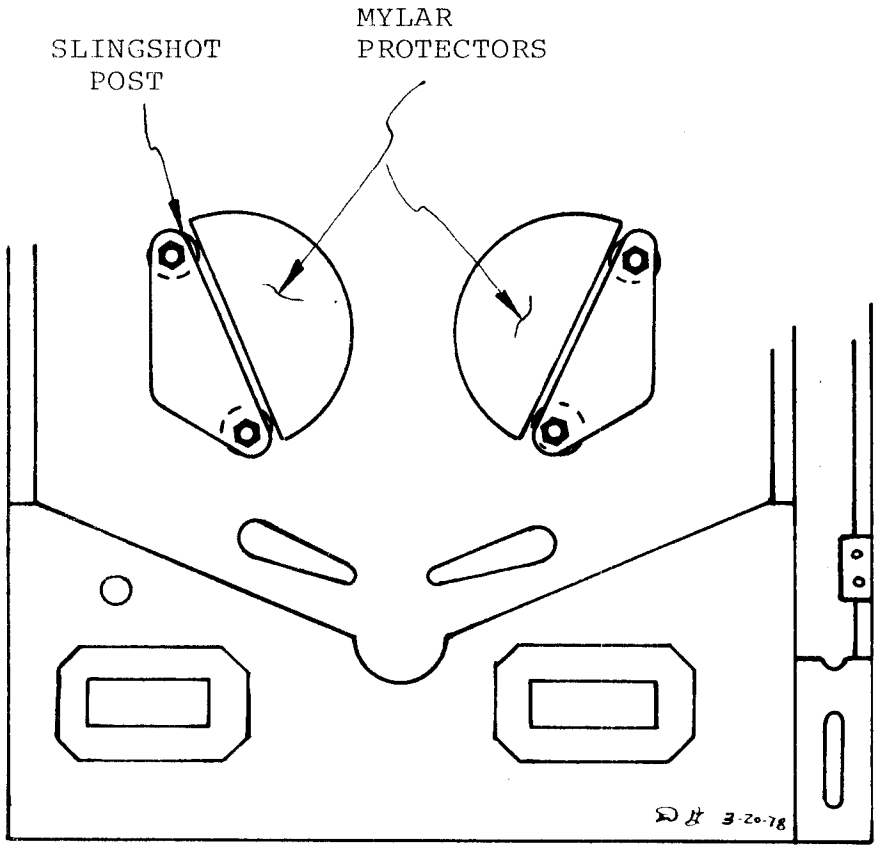
TO APPLY, SIMPLY REMOVE PAPER BACKING AND PLACE MYLAR WITH FLAT EDGE TOUCHING THE TWO SLINGSHOT POSTS.